# Aluminum

MAVERICK POLES AND STRUCTURE, LLC
FORT WORTH, TX
PHONE 817-441-9688
WWW.MAVERICKPOLES.COM

MAVERICK®
POLES AND STRUCTURE, LLC.

# INTRODUCTION

This catalog has been designed to assist you in selecting an aluminum product which meets your specific requirements. The diverse selection of pole sizes and mounting bracket options offered within this catalog should accommodate most of your aluminum needs. However, if the scope of your specifications or requirements cannot be fulfilled with these standard products, please contact us; we can custom-design an infinite array of structures to meet any criteria or specification.

# TABLE OF CONTENTS

## Guide to pole selection

Wind map ..... 3-1
Key to Area catalog ordering code ..... 4-1
Key to Roadway catalog ordering code ..... 5-1
Pole specifications ..... 6-1
Protective Finishes ..... 7-1

## Pole standards

Round tapered poles ..... 8-1
Round non-tapered poles ..... 17-1
Square non-tapered poles ..... 22-1
Round tapered hinged poles ..... 28-1
Round non-tapered hinged poles ..... 33-1
Square non-tapered hinged poles ..... 38-1
Roadway – 1PA-Series ..... 42-1
Roadway – 2PA-Series ..... 49-1
Roadway – 1TA-Series ..... 56-1
Roadway – 2TA-Series ..... 63-1

## Accessories

Bullhorn brackets ..... 72-1
Round top-mount spoke arm brackets ..... 79-1
Square top-mount spoke arm brackets ..... 80-1
Round side-mount brackets ..... 81-1
Tenons ..... 83-1
Hand holes ..... 84-1
Electrical provisions ..... 85-1
Transformer bases ..... 86-1
Full base covers ..... 88-1
Break-away couplings ..... 89-1
Anchor bolts ..... 90-1

# Wind Velocity Map

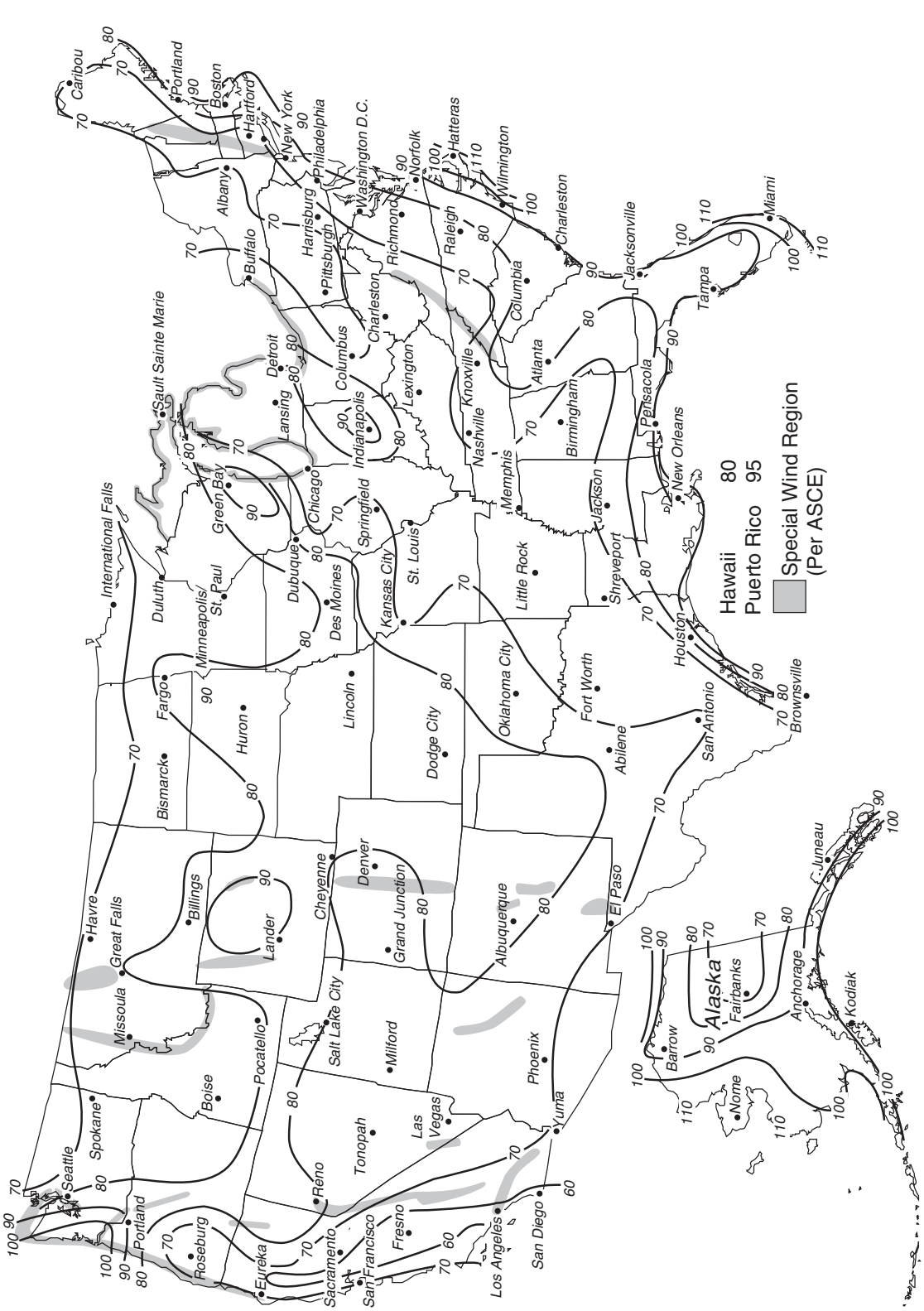


lighting standards have been designed to withstand a specific wind/fixture load. For each lighting standard there is listed a maximum projected effective projected area (E.P.A.) and a typical weight each standard has been calculated to support. The loading capabilities of each standard are indicated for the six wind levels recognized by AASHTO (American Association of State Highway and Transportation Officials and ASCE (American Society of Civil Engineers).

The map above shows the maximum steady wind expected within a 50 year period of recurrance at an elevation of 30 feet above ground. If standards are to be mounted above grade, call for assistance to select the correct standard. The isotach map indicates maximum steady winds. Since winds are rarely steady and usually involve gusts, E.P.A. calculations allow for a 1.3 gust factor.

# *Key to Selecting Area Pole Standards*

**RTAP - 30 - 50 - B9 - AB - FP(WH) - DM19 - XX**

**Category**

**RTAP** – Round Tapered Aluminum Pole

**RNAP**– Round Non-tapered Aluminum Pole

**SNAP** – Square Non-Tapered Aluminum Pole

**RNAH** – Round Non-tapered Aluminum-Hinged

**RTAH** – Round Tapered Aluminum-Hinged

**SNAH**– Square Non-tapered Aluminum-Hinged

**Pole Height**

**08** = 08'
**10** = 10'
**12** = 12'
**14** = 14'
**16** = 16'
**18** = 18'
**20** = 20'
**23** = 23'
**25** = 25'
**28** = 28'
:
**48** = 48'
**50** = 50'

**Base Diameter or Width**

**40** – 4.0"
**45** – 4.5"
**50** – 5.0"
**60** – 6.0"
**70** – 7.0"
**80** – 8.0"
**etc....**

**Wall Thickness**

**A** – 0.125"
**B** – 0.156"
**V** – 0.188"
**H** – 0.250"

**Material Type**

**8** – 6005-T6
**9** – 6063-T6

**Base Type**

**AB** – Anchor Base
**EM** – Embedded
**LAB** – Less Anchor Bolts*

**Finish**

**FP** – Finish Painted
**SB** – Satin Brushed
**+AN** – Anodized

**Standard Colors**

**WH** – White
**LB** – Light Bronze+
**DB** – Dark Bronze+
**MB** – Med Bronze+
**NA** – Natural+
**BL** – Black+
**SP** – Special

**Standard Drilling Patterns**

**DM19** – 1 @ 90°
**DM28** – 2 @ 180°
**DM29** – 2 @ 90°
**DM32** – 3 @ 120°
**DM39** – 3 @ 90°
**DM49** – 4 @ 90°

**Standard Tenons**

**T02R** – TEN-20-R5A
**T25R** – TEN-25-R5A
**T35R** – TEN-35-R5A
**T40R** – TEN-40-R5A

**Optional Features****

**SP** – Spoke Bracket
**FE** – Festoon Box
**DU** – Duplex receptacle
**GF** – Ground Fault Interrupt
**VB** – Vibration Damper
**BC** – Breakaway Couplings
**TB** – Transformer Base
**FB** – Full Base Cover
**NC** – Nut Covers
**BH** – Bullhorn Bracket
**SB** – Side-Mount Bracket
**TM** – Top-Mount Bracket

** Please order accessories per catalog number as a separate line item. Also, please specify quantities, mounting heights and orientations as necessary.
* Please specify existing situation or special circumstance.
+ Standard anodized colors include light bronze AN(LB), medium bronze AN(MB), dark bronze AN(DB), black AN(BL) and natural AN(NA).

## SIX FACTORS ESSENTIAL TO SELECTING THE OPTIMUM STANDARD

1. **Pole Height** – The pole height will be determined by the lighting requirements as specified by the project designer. These lighting requirements will cause variance in the pole height, which is dependent upon fixture types, lighting level and uniformity requirements.

2. **Wind Velocity** - The wind velocity shall be determined from either the project specifications or the wind velocity map on page 3-1. This wind velocity map is based upon a 50-year mean recurrence interval. The wind values shown on this map represent wind velocities at 30 feet above the ground. When a project location is sited between adjacent wind zones, the wind zone with the greater wind velocity should be used. Also, please be aware that special wind conditions may exist around mountainous areas or locations with unique terrain. Special design consideration should be given to such areas.

3. **EPA** - The EPA (Effective Projected Area) of the system should be computed by summing all of the EPA's of the external appurtenances, which are mounted on the pole. The EPA for lighting fixtures can be determined by referencing the appropriate manufacturer's catalog. EPA values for all brackets can be found in the appropriate table located in this catalog.

4. **Weight** – The weight of the system should be computed by summing all of the weights of the external appurtenances mounted on the pole. Weights of fixtures and brackets can be determined from the appropriate lighting fixture manufacturer's catalog and the appropriate table in this catalog respectively.

5. **Pole Duty Rating** - The pole duty rating should be determined by comparing the system EPA and weight with the EPA and weight capacities listed in the appropriate maximum loading table located within this catalog. The values detailed in this table reflect the maximum capacities of the respective poles and are based upon a loading centroid located at the top of the pole.

6. **Pole Base** - The pole base (Anchor Bolt or Embedded) is typically determined by the project specifications.

# *Key to Selecting Roadway Pole Standards*

**RDWA - 30 - 50 - A - AB - FP(WH) - 1 - 06 - X - T - XX**

**Category**
RDWA – Roadway

**Luminaire Mounting Height**
20 = 20'
25 = 25'
30 = 30'
35 = 35'
39 = 39'

**Base Diameter or Width**
40 – 4.0"
45 – 4.5"
50 – 5.0"
60 – 6.0"
70 – 7.0"
80 – 8.0"
etc....

**Wall Thickness**
A – 0.125"
B – 0.156"
V – 0.188"
H – 0.250"

**Base Type**
AB – Anchor Base
EM – Embedded
LAB – Less Anchor Bolts*

**Finish**
FP – Finish Painted
SB – Satin Brushed
+AN – Anodized

**Standard Colors**
WH – White
LB – Light Bronze+
DB – Dark Bronze+
MB – Med Bronze+
NA – Natural+
BL – Black+
SP – Special

**Arm Qty**

**Arm Length**

**Standard Mounting Options**
H – Hub Mount
B – Bolt Mount
S – Simplex Mount
C – Clamp Mount

**Arm Type**
T – Truss Arm
M – Single Member

**Optional Features****
FE – Festoon Box
DU – Duplex receptacle
GF – Ground Fault Interrupt
VB – Vibration Damper
BC – Breakaway Couplings
TB – Transformer Base
FB – Full Base Cover
NC – Nut Covers

** Please order accessories per catalog number as a separate line item. Also, please specify quantities, mounting heights and orientations as necessary.
* Please specify existing situation or special circumstance.
+ Standard anodized colors include light bronze AN(LB), medium bronze AN(MB), dark bronze AN(DB), black AN(BL) and natural AN(NA).

## SIX FACTORS ESSENTIAL TO SELECTING THE OPTIMUM STANDARD

1. **Pole Height** – The pole height will be determined by the lighting requirements as specified by the project designer. These lighting requirements will cause variance in the pole height, which is dependent upon fixture types, lighting level and uniformity requirements.

2. **Wind Velocity** - The wind velocity shall be determined from either the project specifications or the wind velocity map on page 3-1. This wind velocity map is based upon a 50-year mean recurrence interval. The wind values shown on this map represent wind velocities at 30 feet above the ground. When a project location is sited between adjacent wind zones, the wind zone with the greater wind velocity should be used. Also, please be aware that special wind conditions may exist around mountainous areas or locations with unique terrain. Special design consideration should be given to such areas.

3. **EPA** - The EPA (Effective Projected Area) of the system should be computed by summing all of the EPA's of the external appurtenances, which are mounted on the pole. The EPA for lighting fixtures can be determined by referencing the appropriate manufacturer's catalog. EPA values for all brackets can be found in the appropriate table located in this catalog.

4. **Weight** – The weight of the system should be computed by summing all of the weights of the external appurtenances mounted on the pole. Weights of fixtures and brackets can be determined from the appropriate lighting fixture manufacturer's catalog and the appropriate table in this catalog respectively.

5. **Pole Duty Rating** - The pole duty rating should be determined by comparing the system EPA and weight with the EPA and weight capacities listed in the appropriate maximum loading table located within this catalog. The values detailed in this table reflect the maximum capacities of the respective poles and are based upon a loading centroid located at the top of the pole.

6. **Pole Base** - The pole base (Anchor Bolt or Embedded) is typically determined by the project specifications.

# Specifications

**Structural Design**

The pole standards shown in this catalog are designed for the combined effects of both wind and dead load. The wind load effects have been analyzed with wind velocities ranging from 70 to 110 mph plus a 1.3 gust factor. Due to varying wind effects, height correction factors and drag coefficients have been applied to the entire structure. The dead load effects have been determined by using a final deflected position analysis to account for secondary moments caused by eccentric dead loads. These combined loading effects have been used to determine the maximum allowable loading capacities, which are shown on the following pages. These maximum loading capacities include an appropriate factor of safety, which is based upon the allowable stresses outlined in the AASHTO publication entitled "Standard Specifications for Structural Supports for Highway Signs, Luminaires, and Traffic Signals".

**Round Tapered Pole Shaft**

Each pole shaft is spun tapered from all new seamless 6063 alloy aluminum tubing and is heat treated to T6 temper. Each shaft shall have a minimum 6" straight length at the top to accommodate the center hub of the appropriate luminaire bracket or tapered arm. Alternatively, the straight section may be drilled for mounting luminaires.

**Round Straight Pole Shaft**

Each pole shaft is extruded from all new seamless 6063 alloy aluminum tubing and is heat treated to T6 temper. The top of the pole may be drilled or equipped with a top tenon for mounting luminaires.

**Square Straight Pole Shaft**

Each pole shaft is extruded from all new seamless 6005 alloy aluminum tubing. The top of the pole may be drilled or equipped with a top tenon for mounting luminaires.

**Anchor Base**

The anchor base consists of a permanent-mold casting from A356 alloy aluminum. The shaft shall be inserted into the base casting and joined by a continuous circumferential weld at the outside top and inside bottom of the anchor base casting. The assembly shall be heat treated to a T6 temper after all structural welding has been completed. For round poles, aluminum nut covers are included with each anchor base unless otherwise specified. For square standards, the anchor bolt recesses in the anchor base casting are flush-covered by four tamper resistant aluminum nut cover disks.

**Hinged Anchor Base**

The hinged anchor base is cast from A356 alloy aluminum. The hinged base shall be heat treated to a T6 temper condition. The shaft shall be inserted into the tilting section of the hinged base and shall be joined to it by continuous circumferential welds at the outside top and inside bottom of that section. The tilting and anchored sections of the hinged base shall be joined by a 3/4" diameter solid aluminum pivot rod. The tilting section of the hinged base shall be held in a vertical position by three 1/2" – 13 x 2-1/2" stainless steel hex head bolts. These bolts shall attach to stainless steel inserts cast into the aluminum base. A cast aluminum two-piece base cover is included.

**Anchor Bolts**

All standard anchor bolts meet the requirements of ASTM F1554, Grade 55. The bolts have a minimum threaded length of at least 4 inches and are galvanized for a minimum of 12" on the threaded end to the requirements of ASTM A153. Each anchor bolt is supplied with two hex nuts, two flat washers and one lock washer. All standard anchor bolts have a "hooked" end on the embedded portion to assist in the development of pull-out-strength.

**Hand Holes (Round Poles)**

All hand holes are peripherally reinforced and located 18" above the base of the pole. The hand hole opening in all 4" poles shall be 2-3/8" x 4-1/2". For poles with diameters up to 6", the opening shall be 3" x 5". The opening in the 7", 8" and 10" standards shall be 4" x 6". An optional 4" x 8" opening is available for 8" and 10" poles.

**Hand Holes (Square Poles)**

All hand holes are peripherally reinforced and located 18" above the base of the pole. The hand hole opening in all 4" poles shall be 2" x 4". For poles with widths greater than 4", the opening shall be 2-1/2" x 4".



MAVERICK®
POLES AND STRUCTURE, LLC.

# Protective Finishes

## Powder Coating

Powder coating is an advanced method of applying a decorative and protective finish to a wide range of materials and products that are used by both industries and consumers. The powder used for the process is a mixture of finely ground particles of pigment and resin, which is sprayed onto a surface to be coated. The charged powder particles adhere to the electrically-grounded surfaces until heated and fused into a smooth coating in a curing oven. The result is a uniform, durable, high-quality, and attractive finish. Powder coating is the fastest-growing finishing technology in North America, representing over 10% of all industrial finishing applications.

## Satin-Brushed

Satin-brushed finishes are created using a rotary polishing process. This process simply consists of rotating the pole shaft while polishing with fine-grained aluminum oxide cloths resulting in a high quality circumferential satin brushed finish.

## Duranodic or Anodized Finishes

Anodizing is an electrochemical process that thickens and toughens the naturally occurring protective oxide formed on aluminum. The anodic coating is part of the metal, but has porous structure which allows secondary infusions such as coloring. The anodizing process consists of 6 steps:

1. *Cleaning* – Alkaline cleaners are used to remove grease and surface dirt.

2. *Etching* – An appealing matte surface finish is created with hot solutions of sodium hydroxide to remove minor surface imperfections. A thin layer of aluminum is actually removed to create this matte or dull finish.

3. *Desmutting* – A dilute acid solution is used to bring the aluminum back to its original color.

4. *Anodizing* – The anodic film is built and combined with the metal by passing an electrical current through an acid electrolyte bath in which the aluminum is immersed. The coating thickness and surface characteristics are tightly controlled to meet end product specifications.

5. *Coloring* – The one-step integral coloring process combines anodizing and coloring to simultaneously form and color the oxide cell wall in bronze or black shades while forming a more abrasive-resistant surface than conventional anodizing.

6. *Sealing* – This process closes the pores in the anodic film, giving a surface resistant to staining, abrasion, crazing and color degradation.

# Round Tapered Aluminum Poles (8' to 23')

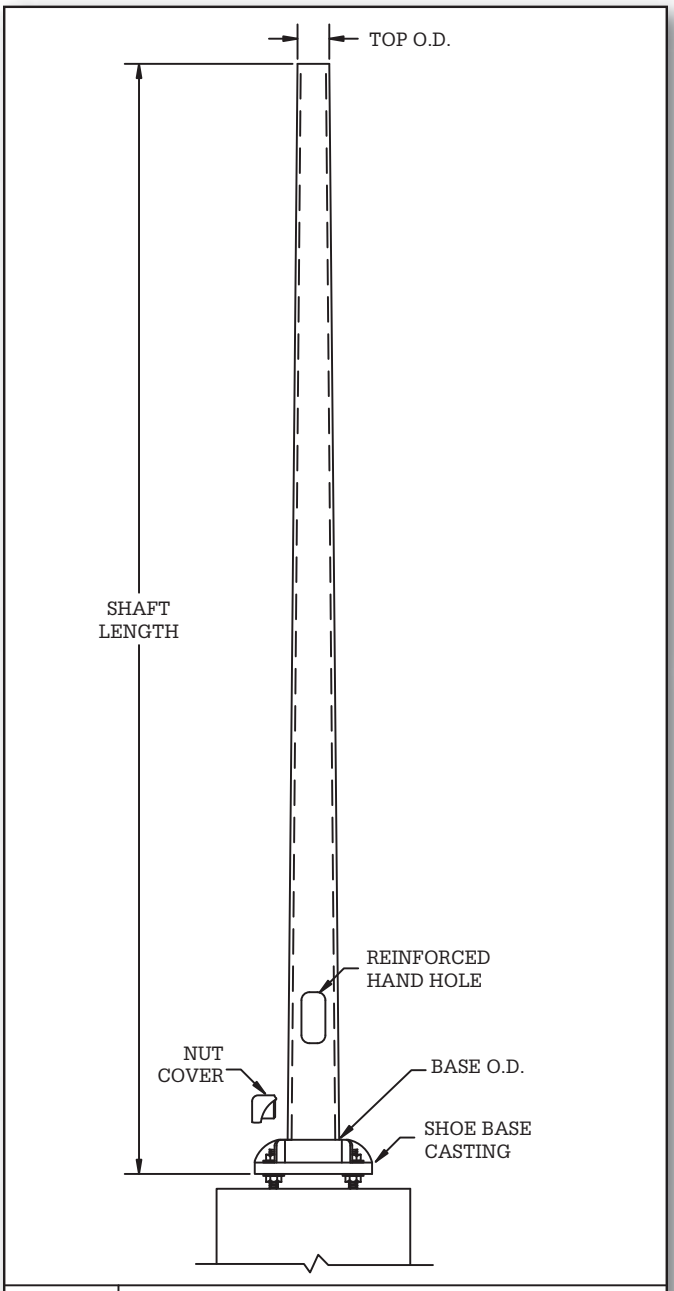


DETAIL | **POLE ASSEMBLY**

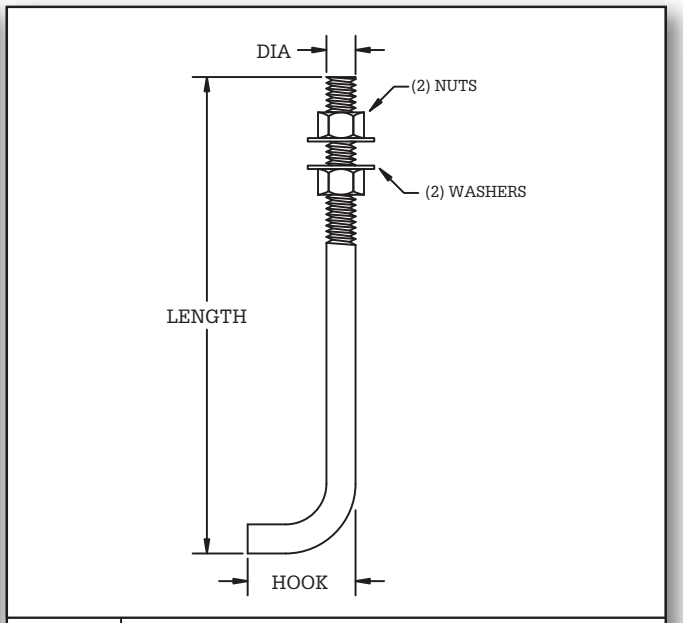


DETAIL 1 | **ANCHOR BOLT**

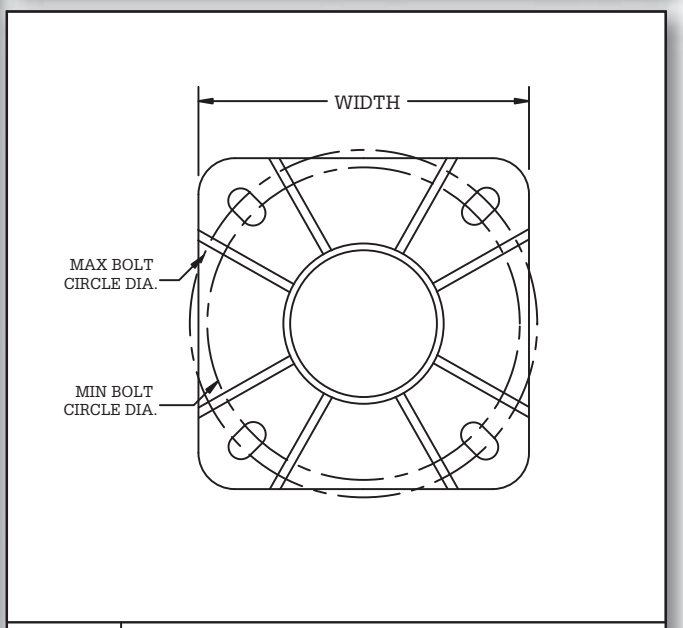


DETAIL 2 | **BASEPLATE (SHOE-BASE CASTING)**



MAVERICK®
POLES AND STRUCTURE, LLC.

# Round Tapered Aluminum Poles (8' to 23')

## STRUCTURE DATA

| Catalog Number | Gross Weight (Lbs) | Pole Shaft Data | | | | Base Plate Data | | Anchor Bolt Data |
|---|---|---|---|---|---|---|---|---|
| | | Base O.D. (in) | Top O.D. (in) | Wall Thk. (in) | Shaft Length (ft) | Bolt Circle Range (in) | Plate Width (in) | Dia x Lgth x Hk |
| RTAP-08-40-A9-AB | 30 | 4.0 | 3.0 | 0.125 | 7.67 | 6.5 to 8.25 | 8.75 | 0.75 x 17 x 3 |
| RTAP-10-40-A9-AB | 33 | 4.0 | 3.0 | 0.125 | 9.67 | 6.5 to 8.25 | 8.75 | 0.75 x 17 x 3 |
| RTAP-10-50-A9-AB | 37 | 5.0 | 3.0 | 0.125 | 9.67 | 7.5 to 9.5 | 9.25 | 0.75 x 17 x 3 |
| RTAP-12-40-A9-AB | 37 | 4.0 | 3.0 | 0.125 | 11.67 | 6.5 to 8.25 | 8.75 | 0.75 x 17 x 3 |
| RTAP-12-50-A9-AB | 42 | 5.0 | 3.0 | 0.125 | 11.67 | 7.5 to 9.5 | 9.25 | 0.75 x 17 x 3 |
| RTAP-12-50-B9-AB | 48 | 5.0 | 3.0 | 0.156 | 11.67 | 7.5 to 9.5 | 9.25 | 0.75 x 17 x 3 |
| RTAP-12-50-V9-AB | 54 | 5.0 | 3.0 | 0.188 | 11.67 | 7.5 to 9.5 | 9.25 | 0.75 x 17 x 3 |
| RTAP-14-40-A9-AB | 40 | 4.0 | 3.0 | 0.125 | 13.67 | 6.5 to 8.25 | 8.75 | 0.75 x 17 x 3 |
| RTAP-14-50-A9-AB | 46 | 5.0 | 3.0 | 0.125 | 13.67 | 7.5 to 9.5 | 9.25 | 0.75 x 17 x 3 |
| RTAP-14-50-B9-AB | 53 | 5.0 | 3.0 | 0.156 | 13.67 | 7.5 to 9.5 | 9.25 | 0.75 x 17 x 3 |
| RTAP-14-50-V9-AB | 61 | 5.0 | 3.0 | 0.188 | 13.67 | 7.5 to 9.5 | 9.25 | 0.75 x 17 x 3 |
| RTAP-16-40-A9-AB | 44 | 4.0 | 3.0 | 0.125 | 15.67 | 6.5 to 8.25 | 8.75 | 0.75 x 17 x 3 |
| RTAP-16-50-A9-AB | 49 | 5.0 | 3.0 | 0.125 | 15.67 | 7.5 to 9.5 | 9.25 | 0.75 x 17 x 3 |
| RTAP-16-50-B9-AB | 59 | 5.0 | 3.0 | 0.156 | 15.67 | 7.5 to 9.5 | 9.25 | 0.75 x 17 x 3 |
| RTAP-16-50-V9-AB | 68 | 5.0 | 3.0 | 0.188 | 15.67 | 7.5 to 9.5 | 9.25 | 0.75 x 17 x 3 |
| RTAP-16-60-B9-AB | 74 | 6.0 | 4.0 | 0.156 | 15.67 | 8.75 to 10.25 | 10.25 | 0.75 x 17 x 3 |
| RTAP-16-60-V9-AB | 84 | 6.0 | 4.0 | 0.188 | 15.67 | 8.75 to 10.25 | 10.25 | 0.75 x 17 x 3 |
| RTAP-18-50-A9-AB | 53 | 5.0 | 3.0 | 0.125 | 17.67 | 7.5 to 9.5 | 9.25 | 0.75 x 17 x 3 |
| RTAP-18-50-B9-AB | 63 | 5.0 | 3.0 | 0.156 | 17.67 | 7.5 to 9.5 | 9.25 | 0.75 x 17 x 3 |
| RTAP-18-50-V9-AB | 73 | 5.0 | 3.0 | 0.188 | 17.67 | 7.5 to 9.5 | 9.25 | 0.75 x 17 x 3 |
| RTAP-18-60-B9-AB | 81 | 6.0 | 4.0 | 0.156 | 17.67 | 8.75 to 10.25 | 10.25 | 0.75 x 17 x 3 |
| RTAP-18-60-V9-AB | 92 | 6.0 | 4.0 | 0.188 | 17.67 | 8.75 to 10.25 | 10.25 | 0.75 x 17 x 3 |
| RTAP-18-70-B9-AB | 109 | 7.0 | 4.0 | 0.156 | 17.67 | 9.875 to 11.25 | 10.63 | 1 x 36 x 4 |
| RTAP-20-50-A9-AB | 56 | 5.0 | 3.0 | 0.125 | 19.67 | 7.5 to 9.5 | 9.25 | 0.75 x 17 x 3 |
| RTAP-20-50-B9-AB | 68 | 5.0 | 3.0 | 0.156 | 19.67 | 7.5 to 9.5 | 9.25 | 0.75 x 17 x 3 |
| RTAP-20-50-V9-AB | 79 | 5.0 | 3.0 | 0.188 | 19.67 | 7.5 to 9.5 | 9.25 | 0.75 x 17 x 3 |
| RTAP-20-60-B9-AB | 84 | 6.0 | 4.0 | 0.156 | 19.67 | 8.75 to 10.25 | 10.25 | 0.75 x 17 x 3 |
| RTAP-20-60-V9-AB | 97 | 6.0 | 4.0 | 0.188 | 19.67 | 8.75 to 10.25 | 10.25 | 0.75 x 17 x 3 |
| RTAP-20-70-B9-AB | 114 | 7.0 | 4.0 | 0.156 | 19.67 | 9.875 to 11.25 | 10.63 | 1 x 36 x 4 |
| RTAP-23-60-B9-AB | 95 | 6.0 | 4.0 | 0.156 | 22.67 | 8.75 to 10.25 | 10.25 | 0.75 x 17 x 3 |
| RTAP-23-60-V9-AB | 107 | 6.0 | 4.0 | 0.188 | 22.67 | 8.75 to 10.25 | 10.25 | 0.75 x 17 x 3 |
| RTAP-23-70-B9-AB | 122 | 7.0 | 4.0 | 0.156 | 22.67 | 9.875 to 11.25 | 10.63 | 1 x 36 x 4 |
| RTAP-23-80-B9-AB | 134 | 8.0 | 4.5 | 0.156 | 22.67 | 11 to 12.125 | 11.63 | 1 x 36 x 4 |
| RTAP-23-80-V9-AB | 153 | 8.0 | 4.5 | 0.188 | 22.67 | 11 to 12.125 | 11.63 | 1 x 36 x 4 |

MAVERICK®
POLES AND STRUCTURE, LLC.

# Round Tapered Aluminum Poles (25' to 50')

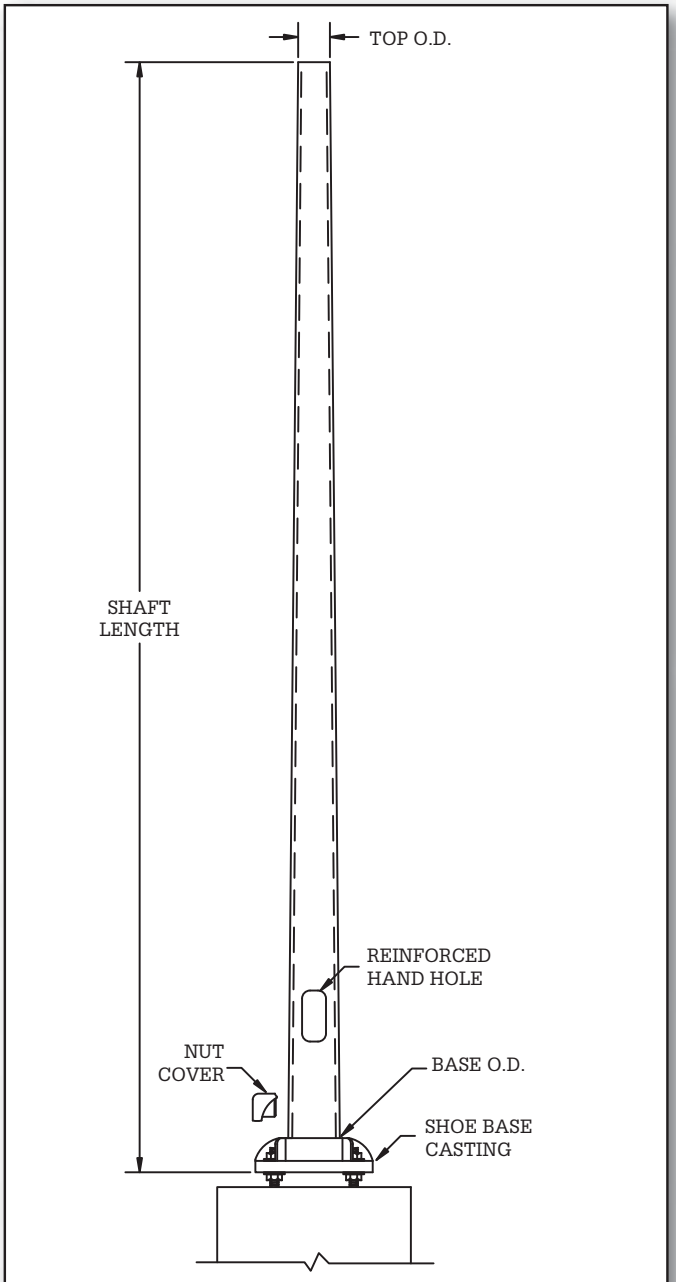


DETAIL | **POLE ASSEMBLY**

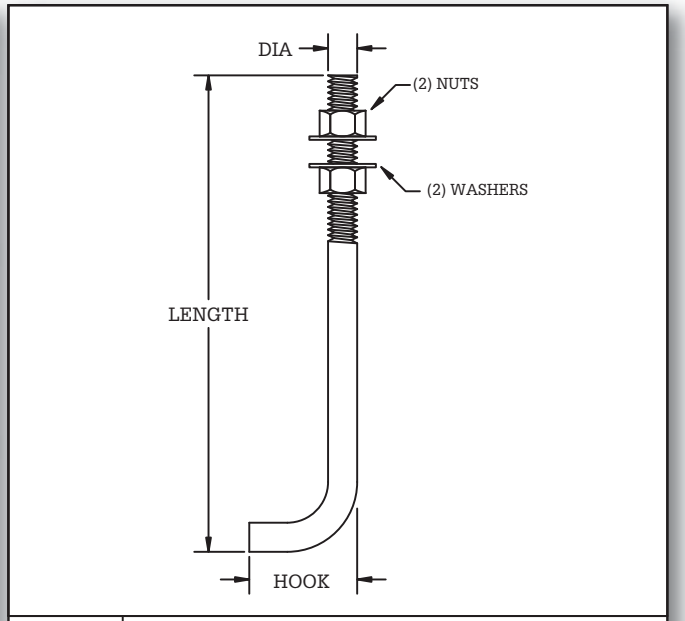


DETAIL 1 | **ANCHOR BOLT**

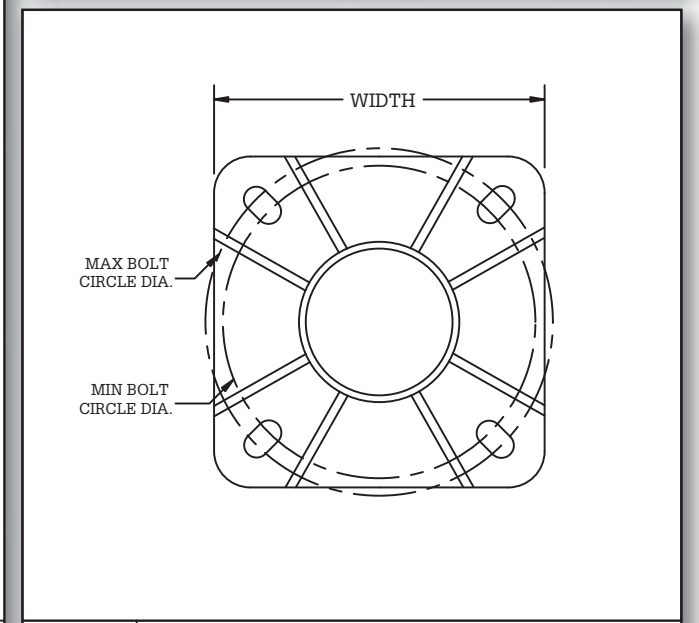


DETAIL 2 | **BASEPLATE (SHOE-BASE CASTING)**

# Round Tapered Aluminum Poles (25' to 50')

## STRUCTURE DATA

| Catalog Number | Gross Weight (Lbs) | Pole Shaft Data | | | | Base Plate Data | | Anchor Bolt Data |
|---|---|---|---|---|---|---|---|---|
| | | Base O.D. (in) | Top O.D. (in) | Wall Thk. (in) | Shaft Length (ft) | Bolt Circle Range (in) | Plate Width (in) | Dia x Lgth x Hk |
| RTAP-25-60-B9-AB* | 109 | 6.0 | 4.0 | 0.156 | 24.67 | 8.75 to 10.25 | 10.25 | 0.75 x 17 x 3 |
| RTAP-25-60-V9-AB | 119 | 6.0 | 4.0 | 0.188 | 24.67 | 8.75 to 10.25 | 10.25 | 0.75 x 17 x 3 |
| RTAP-25-70-B9-AB | 130 | 7.0 | 4.0 | 0.156 | 24.67 | 9.875 to 11.25 | 10.63 | 1 x 36 x 4 |
| RTAP-25-80-B9-AB | 138 | 8.0 | 4.5 | 0.156 | 24.67 | 11 to 12.125 | 11.63 | 1 x 36 x 4 |
| RTAP-25-80-V9-AB | 164 | 8.0 | 4.5 | 0.188 | 24.67 | 11 to 12.125 | 11.63 | 1 x 36 x 4 |
| RTAP-28-70-B9-AB* | 146 | 7.0 | 4.0 | 0.156 | 27.67 | 9.875 to 11.25 | 10.63 | 1 x 36 x 4 |
| RTAP-28-80-B9-AB | 150 | 8.0 | 4.5 | 0.156 | 27.67 | 11 to 12.125 | 11.63 | 1 x 36 x 4 |
| RTAP-28-80-V9-AB | 173 | 8.0 | 4.5 | 0.188 | 27.67 | 11 to 12.125 | 11.63 | 1 x 36 x 4 |
| RTAP-28-80-H9-AB | 226 | 8.0 | 4.5 | 0.250 | 27.67 | 11 to 12.125 | 11.63 | 1 x 36 x 4 |
| RTAP-28-10-V9-AB | 215 | 10.0 | 6.0 | 0.188 | 27.67 | 14.50 | 14.50 | 1 x 36 x 4 |
| RTAP-28-10-H9-AB | 315 | 10.0 | 6.0 | 0.250 | 27.67 | 14.50 | 14.50 | 1.25 x 42 x 6 |
| RTAP-30-70-B9-AB* | 153 | 7.0 | 4.0 | 0.156 | 29.67 | 9.875 to 11.25 | 10.63 | 1 x 36 x 4 |
| RTAP-30-80-B9-AB* | 165 | 8.0 | 4.5 | 0.156 | 29.67 | 11 to 12.125 | 11.63 | 1 x 36 x 4 |
| RTAP-30-80-V9-AB | 182 | 8.0 | 4.5 | 0.188 | 29.67 | 11 to 12.125 | 11.63 | 1 x 36 x 4 |
| RTAP-30-80-H9-AB | 239 | 8.0 | 4.5 | 0.250 | 29.67 | 11 to 12.125 | 11.63 | 1 x 36 x 4 |
| RTAP-30-10-V9-AB | 229 | 10.0 | 6.0 | 0.188 | 29.67 | 14.50 | 14.50 | 1 x 36 x 4 |
| RTAP-30-10-H9-AB | 328 | 10.0 | 6.0 | 0.250 | 29.67 | 14.50 | 14.50 | 1.25 x 42 x 6 |
| RTAP-33-80-B9-AB* | 177 | 8.0 | 4.5 | 0.156 | 32.67 | 11 to 12.125 | 11.63 | 1 x 36 x 4 |
| RTAP-33-80-V9-AB | 204 | 8.0 | 4.5 | 0.188 | 32.67 | 11 to 12.125 | 11.63 | 1 x 36 x 4 |
| RTAP-33-80-H9-AB | 253 | 8.0 | 4.5 | 0.250 | 32.67 | 11 to 12.125 | 11.63 | 1 x 36 x 4 |
| RTAP-33-10-V9-AB | 257 | 10.0 | 6.0 | 0.188 | 32.67 | 14.50 | 14.50 | 1 x 36 x 4 |
| RTAP-33-10-H9-AB | 354 | 10.0 | 6.0 | 0.250 | 32.67 | 14.50 | 14.50 | 1.25 x 42 x 6 |
| RTAP-35-80-B9-AB* | 188 | 8.0 | 4.5 | 0.156 | 34.67 | 11 to 12.125 | 11.63 | 1 x 36 x 4 |
| RTAP-35-80-V9-AB | 208 | 8.0 | 4.5 | 0.188 | 34.67 | 11 to 12.125 | 11.63 | 1 x 36 x 4 |
| RTAP-35-80-H9-AB | 269 | 8.0 | 4.5 | 0.250 | 34.67 | 11 to 12.125 | 11.63 | 1 x 36 x 4 |
| RTAP-35-10-V9-AB | 258 | 10.0 | 6.0 | 0.188 | 34.67 | 14.50 | 14.50 | 1 x 36 x 4 |
| RTAP-35-10-H9-AB | 372 | 10.0 | 6.0 | 0.250 | 34.67 | 14.50 | 14.50 | 1.25 x 42 x 6 |
| RTAP-37-80-V9-AB* | 226 | 8.0 | 4.5 | 0.188 | 36.67 | 11 to 12.125 | 11.63 | 1 x 36 x 4 |
| RTAP-37-80-H9-AB | 288 | 8.0 | 4.5 | 0.250 | 36.67 | 11 to 12.125 | 11.63 | 1 x 36 x 4 |
| RTAP-37-10-V9-AB | 271 | 10.0 | 6.0 | 0.188 | 36.67 | 14.50 | 14.50 | 1 x 36 x 4 |
| RTAP-37-10-H9-AB | 387 | 10.0 | 6.0 | 0.250 | 36.67 | 14.50 | 14.50 | 1.25 x 42 x 6 |
| RTAP-39-80-V9-AB* | 239 | 8.0 | 4.5 | 0.188 | 38.67 | 11 to 12.125 | 11.63 | 1 x 36 x 4 |
| RTAP-39-80-H9-AB | 302 | 8.0 | 4.5 | 0.250 | 38.67 | 11 to 12.125 | 11.63 | 1 x 36 x 4 |
| RTAP-39-10-V9-AB | 285 | 10.0 | 6.0 | 0.188 | 38.67 | 14.50 | 14.50 | 1 x 36 x 4 |
| RTAP-39-10-H9-AB | 405 | 10.0 | 6.0 | 0.250 | 38.67 | 14.50 | 14.50 | 1.25 x 42 x 6 |
| RTAP-48-10-H9-AB+ | 462 | 10.0 | 6.0 | 0.250 | 47.67 | 14.50 | 14.50 | 1.25 x 42 x 6 |
| RTAP-50-10-H9-AB+ | 480 | 10.0 | 6.0 | 0.250 | 49.67 | 14.50 | 14.50 | 1.25 x 42 x 6 |

* Includes factory-installed vibration damper.
\+ Two-piece pole

MAVERICK®
POLES AND STRUCTURE, LLC.

# *Round Tapered Aluminum Poles (8' to 23')*

## STRUCTURE LOADING CAPACITIES

| Catalog Number | Maximum Loading | | | | | | | | | |
|---|---|---|---|---|---|---|---|---|---|---|
| | 70 mph | | 80 mph | | 90 mph | | 100 mph | | 110 mph | |
| | EPA ($ft^2$) | Wt. (lbs) | EPA ($ft^2$) | Wt. (lbs) | EPA ($ft^2$) | Wt. (lbs) | EPA ($ft^2$) | Wt. (lbs) | EPA ($ft^2$) | Wt. (lbs) |
| RTAP-08-40-A9-AB | 18.9 | 473 | 14.2 | 355 | 10.9 | 273 | 8.6 | 215 | 6.9 | 173 |
| RTAP-10-40-A9-AB | 14.0 | 350 | 10.4 | 260 | 7.9 | 198 | 6.1 | 153 | 4.8 | 120 |
| RTAP-10-50-A9-AB | 23.2 | 580 | 17.3 | 433 | 13.4 | 335 | 10.6 | 265 | 8.6 | 215 |
| RTAP-12-40-A9-AB | 10.7 | 268 | 7.8 | 195 | 5.6 | 140 | 4.2 | 105 | 3.3 | 83 |
| RTAP-12-50-A9-AB | 18.1 | 453 | 13.4 | 335 | 10.2 | 255 | 8.0 | 200 | 6.4 | 160 |
| RTAP-12-50-B9-AB | 22.8 | 570 | 16.9 | 423 | 13.1 | 328 | 10.2 | 255 | 8.2 | 205 |
| RTAP-12-50-V9-AB | 27.1 | 678 | 20.2 | 505 | 15.6 | 390 | 12.4 | 310 | 10.0 | 250 |
| RTAP-14-40-A9-AB | 8.1 | 203 | 5.8 | 145 | 4.0 | 100 | 2.8 | 70 | 2.1 | 53 |
| RTAP-14-50-A9-AB | 14.5 | 363 | 10.5 | 263 | 7.8 | 195 | 6.0 | 150 | 4.7 | 118 |
| RTAP-14-50-B9-AB | 18.4 | 460 | 13.4 | 335 | 10.1 | 253 | 7.9 | 198 | 6.2 | 155 |
| RTAP-14-50-V9-AB | 21.9 | 548 | 16.1 | 403 | 12.4 | 310 | 9.6 | 240 | 7.8 | 195 |
| RTAP-16-40-A9-AB | 6.2 | 155 | 4.1 | 103 | 2.7 | 68 | 1.8 | 45 | 1.1 | 28 |
| RTAP-16-50-A9-AB | 11.5 | 288 | 8.1 | 203 | 5.9 | 148 | 4.5 | 113 | 3.4 | 85 |
| RTAP-16-50-B9-AB | 14.8 | 370 | 10.7 | 268 | 8.0 | 200 | 6.1 | 153 | 4.7 | 118 |
| RTAP-16-50-V9-AB | 17.8 | 445 | 12.9 | 323 | 9.8 | 245 | 7.5 | 188 | 6.0 | 150 |
| RTAP-16-60-B9-AB | 22.4 | 560 | 16.6 | 415 | 12.7 | 318 | 10.1 | 253 | 8.2 | 205 |
| RTAP-16-60-V9-AB | 27.3 | 683 | 20.0 | 500 | 15.8 | 395 | 12.6 | 315 | 10.2 | 255 |
| RTAP-18-50-A9-AB | 8.7 | 218 | 3.5 | 88 | 4.1 | 103 | 2.9 | 73 | 2.1 | 53 |
| RTAP-18-50-B9-AB | 11.6 | 290 | 6.5 | 163 | 5.9 | 148 | 4.4 | 110 | 3.3 | 83 |
| RTAP-18-50-V9-AB | 14.6 | 365 | 8.2 | 205 | 7.6 | 190 | 5.8 | 145 | 4.5 | 113 |
| RTAP-18-60-B9-AB | 18.5 | 463 | 13.5 | 338 | 10.2 | 255 | 8.1 | 203 | 6.5 | 163 |
| RTAP-18-60-V9-AB | 22.8 | 570 | 16.8 | 420 | 12.9 | 323 | 10.2 | 255 | 8.2 | 205 |
| RTAP-18-70-B9-AB | 27.3 | 683 | 20.2 | 505 | 15.6 | 390 | 12.5 | 313 | 10.1 | 253 |
| RTAP-20-50-A9-AB | 7.1 | 178 | 4.6 | 115 | 2.9 | 73 | 1.9 | 48 | 1.2 | 30 |
| RTAP-20-50-B9-AB | 9.8 | 245 | 6.6 | 165 | 4.6 | 115 | 3.2 | 80 | 2.2 | 55 |
| RTAP-20-50-V9-AB | 12.5 | 313 | 8.7 | 218 | 6.1 | 153 | 4.5 | 113 | 3.3 | 83 |
| RTAP-20-60-B9-AB | 15.9 | 398 | 11.3 | 283 | 8.4 | 210 | 6.6 | 165 | 5.2 | 130 |
| RTAP-20-60-V9-AB | 19.9 | 498 | 14.4 | 360 | 10.8 | 270 | 8.5 | 213 | 6.8 | 170 |
| RTAP-20-70-B9-AB | 23.9 | 598 | 17.6 | 440 | 13.4 | 335 | 10.6 | 265 | 8.6 | 215 |
| RTAP-23-60-B9-AB | 11.8 | 295 | 8.0 | 200 | 5.6 | 140 | 4.4 | 110 | 3.3 | 83 |
| RTAP-23-60-V9-AB | 14.2 | 355 | 10.6 | 265 | 7.8 | 195 | 6.0 | 150 | 4.7 | 118 |
| RTAP-23-70-B9-AB | 17.7 | 443 | 13.4 | 335 | 10.0 | 250 | 7.8 | 195 | 6.2 | 155 |
| RTAP-23-80-B9-AB | 26.5 | 663 | 19.5 | 488 | 15.1 | 378 | 11.9 | 298 | 9.5 | 238 |
| RTAP-23-80-V9-AB | 32.8 | 820 | 24.4 | 610 | 18.8 | 470 | 15.1 | 378 | 12.1 | 303 |

# Round Tapered Aluminum Poles (25' to 50')

## STRUCTURE LOADING CAPACITIES

| Catalog Number | Maximum Loading | | | | | | | | | |
|---|---|---|---|---|---|---|---|---|---|---|
| | 70 mph | | 80 mph | | 90 mph | | 100 mph | | 110 mph | |
| | EPA ($ft^2$) | Wt. (lbs) | EPA ($ft^2$) | Wt. (lbs) | EPA ($ft^2$) | Wt. (lbs) | EPA ($ft^2$) | Wt. (lbs) | EPA ($ft^2$) | Wt. (lbs) |
| RTAP-25-60-B9-AB* | 9.5 | 238 | 6.2 | 155 | 4.2 | 105 | 3.1 | 78 | 2.4 | 60 |
| RTAP-25-60-V9-AB | 12.7 | 318 | 8.6 | 215 | 6.1 | 153 | 4.6 | 115 | 3.5 | 88 |
| RTAP-25-70-B9-AB | 15.8 | 395 | 11.2 | 280 | 8.2 | 205 | 6.4 | 160 | 4.9 | 123 |
| RTAP-25-80-B9-AB | 22.8 | 570 | 16.7 | 418 | 12.8 | 320 | 10.0 | 250 | 8.0 | 200 |
| RTAP-25-80-V9-AB | 28.5 | 713 | 21.2 | 530 | 16.2 | 405 | 12.8 | 320 | 10.4 | 260 |
| RTAP-28-70-B9-AB* | 12.0 | 300 | 8.1 | 203 | 5.8 | 145 | 4.2 | 105 | 3.3 | 83 |
| RTAP-28-80-B9-AB | 18.2 | 455 | 13.1 | 328 | 9.9 | 248 | 7.6 | 190 | 6.0 | 150 |
| RTAP-28-80-V9-AB | 23.2 | 580 | 16.9 | 423 | 12.9 | 323 | 10.1 | 253 | 8.0 | 200 |
| RTAP-28-80-H9-AB | 32.6 | 815 | 24.1 | 603 | 18.6 | 465 | 14.7 | 368 | 11.8 | 295 |
| RTAP-28-10-V9-AB | 41.6 | 1040 | 31.3 | 783 | 24.2 | 605 | 19.2 | 480 | 15.3 | 383 |
| RTAP-28-10-H9-AB | 56.2 | 1405 | 42.6 | 1065 | 33.2 | 830 | 26.4 | 660 | 21.2 | 530 |
| RTAP-30-70-B9-AB* | 10.0 | 250 | 6.5 | 163 | 4.5 | 113 | 3.2 | 80 | 2.4 | 60 |
| RTAP-30-80-B9-AB* | 15.5 | 388 | 11.1 | 278 | 8.2 | 205 | 6.2 | 155 | 4.8 | 120 |
| RTAP-30-80-V9-AB | 20.2 | 505 | 14.6 | 365 | 11.1 | 278 | 8.6 | 215 | 6.7 | 168 |
| RTAP-30-80-H9-AB | 28.8 | 720 | 21.2 | 530 | 16.2 | 405 | 12.8 | 320 | 10.2 | 255 |
| RTAP-30-10-V9-AB | 37.3 | 933 | 28.0 | 700 | 21.5 | 538 | 16.8 | 420 | 13.3 | 333 |
| RTAP-30-10-H9-AB | 50.7 | 1268 | 38.2 | 955 | 29.6 | 740 | 23.5 | 588 | 18.8 | 470 |
| RTAP-33-80-B9-AB* | 12.1 | 303 | 8.4 | 210 | 6.0 | 150 | 4.5 | 113 | 3.3 | 83 |
| RTAP-33-80-V9-AB | 16.4 | 410 | 11.5 | 288 | 8.5 | 213 | 6.5 | 163 | 4.9 | 123 |
| RTAP-33-80-H9-AB | 24.0 | 600 | 17.4 | 435 | 13.2 | 330 | 10.2 | 255 | 8.1 | 203 |
| RTAP-33-10-V9-AB | 31.5 | 788 | 23.5 | 588 | 18.0 | 450 | 14.0 | 350 | 10.8 | 270 |
| RTAP-33-10-H9-AB | 43.5 | 1088 | 32.7 | 818 | 25.2 | 630 | 19.9 | 498 | 15.8 | 395 |
| RTAP-35-80-B9-AB* | 10.2 | 255 | 6.8 | 170 | 4.8 | 120 | 3.4 | 85 | 2.5 | 63 |
| RTAP-35-80-V9-AB | 14.0 | 350 | 9.8 | 245 | 7.1 | 178 | 5.3 | 133 | 4.0 | 100 |
| RTAP-35-80-H9-AB | 21.3 | 533 | 15.2 | 380 | 11.4 | 285 | 8.8 | 220 | 6.9 | 173 |
| RTAP-35-10-V9-AB | 28.4 | 710 | 21.1 | 528 | 16.0 | 400 | 12.2 | 305 | 9.4 | 235 |
| RTAP-35-10-H9-AB | 39.4 | 985 | 29.5 | 738 | 22.7 | 568 | 17.6 | 440 | 13.9 | 348 |
| RTAP-37-80-V9-AB* | 12.0 | 300 | 8.1 | 203 | 5.8 | 145 | 4.2 | 105 | 3.1 | 78 |
| RTAP-37-80-H9-AB | 18.7 | 468 | 13.3 | 333 | 9.9 | 248 | 7.5 | 188 | 5.8 | 145 |
| RTAP-37-10-V9-AB | 25.4 | 635 | 18.7 | 468 | 14.1 | 353 | 10.7 | 268 | 8.0 | 200 |
| RTAP-37-10-H9-AB | 35.8 | 895 | 26.7 | 668 | 20.4 | 510 | 15.8 | 395 | 12.2 | 305 |
| RTAP-39-80-V9-AB* | 10.1 | 253 | 6.6 | 165 | 4.6 | 115 | 3.2 | 80 | 2.1 | 53 |
| RTAP-39-80-H9-AB | 16.5 | 413 | 11.4 | 285 | 8.4 | 210 | 6.4 | 160 | 4.7 | 118 |
| RTAP-39-10-V9-AB | 22.8 | 570 | 16.7 | 418 | 12.4 | 310 | 9.2 | 230 | 6.8 | 170 |
| RTAP-39-10-H9-AB | 32.4 | 810 | 24.0 | 600 | 18.2 | 455 | 14.0 | 350 | 10.7 | 268 |
| RTAP-48-10-H9-AB+ | 19.6 | 490 | 14.1 | 353 | 10.4 | 260 | 7.6 | 190 | 5.4 | 135 |
| RTAP-50-10-H9-AB+ | 17.5 | 438 | 12.5 | 313 | 9.1 | 228 | 6.5 | 163 | 4.5 | 113 |

* Includes factory-installed vibration damper.
\+ Two-piece pole

MAVERICK®
POLES AND STRUCTURE, LLC.

# Round Tapered Aluminum Poles (8'-23)

## FOUNDATIONS ( 8' to 23') RTAP-AB

| Catalog Number | Foundation Data | | | | | | Anchor Bolt Data | |
|---|---|---|---|---|---|---|---|---|
| | Caisson Diameter (in) | Caisson Depth (ft) | Vert Rebar Qty | Vert Rebar Size | Concrete Volume (Cu Yds) | Steel Weight (lbs) | Dia x Lgth x Hk | Bolt Circle Range (in) |
| RTAP-08-40-A9-AB | 24 | 5.00 | 8 | #5 | 0.58 | 59 | 0.75 x 17 x 3 | 6.5 to 8.25 |
| RTAP-10-40-A9-AB | 24 | 5.00 | 8 | #5 | 0.58 | 59 | 0.75 x 17 x 3 | 6.5 to 8.25 |
| RTAP-10-50-A9-AB | 24 | 5.00 | 8 | #5 | 0.58 | 59 | 0.75 x 17 x 3 | 7.5 to 9.5 |
| RTAP-12-40-A9-AB | 24 | 5.00 | 8 | #5 | 0.58 | 59 | 0.75 x 17 x 3 | 6.5 to 8.25 |
| RTAP-12-50-A9-AB | 24 | 5.00 | 8 | #5 | 0.58 | 59 | 0.75 x 17 x 3 | 7.5 to 9.5 |
| RTAP-12-50-B9-AB | 24 | 5.00 | 8 | #5 | 0.58 | 59 | 0.75 x 17 x 3 | 7.5 to 9.5 |
| RTAP-12-50-V9-AB | 24 | 5.00 | 8 | #5 | 0.58 | 59 | 0.75 x 17 x 3 | 7.5 to 9.5 |
| RTAP-14-40-A9-AB | 24 | 5.00 | 8 | #5 | 0.58 | 59 | 0.75 x 17 x 3 | 6.5 to 8.25 |
| RTAP-14-50-A9-AB | 24 | 5.00 | 8 | #5 | 0.58 | 59 | 0.75 x 17 x 3 | 7.5 to 9.5 |
| RTAP-14-50-B9-AB | 24 | 5.00 | 8 | #5 | 0.58 | 59 | 0.75 x 17 x 3 | 7.5 to 9.5 |
| RTAP-14-50-V9-AB | 24 | 5.00 | 8 | #5 | 0.58 | 59 | 0.75 x 17 x 3 | 7.5 to 9.5 |
| RTAP-16-40-A9-AB | 24 | 5.00 | 8 | #5 | 0.58 | 59 | 0.75 x 17 x 3 | 6.5 to 8.25 |
| RTAP-16-50-A9-AB | 24 | 5.00 | 8 | #5 | 0.58 | 59 | 0.75 x 17 x 3 | 7.5 to 9.5 |
| RTAP-16-50-B9-AB | 24 | 5.00 | 8 | #5 | 0.58 | 59 | 0.75 x 17 x 3 | 7.5 to 9.5 |
| RTAP-16-50-V9-AB | 24 | 5.00 | 8 | #5 | 0.58 | 59 | 0.75 x 17 x 3 | 7.5 to 9.5 |
| RTAP-16-60-B9-AB | 24 | 5.00 | 8 | #5 | 0.58 | 59 | 0.75 x 17 x 3 | 8.75 to 10.25 |
| RTAP-16-60-V9-AB | 24 | 5.00 | 8 | #5 | 0.58 | 59 | 0.75 x 17 x 3 | 8.75 to 10.25 |
| RTAP-18-50-A9-AB | 24 | 5.00 | 8 | #5 | 0.58 | 59 | 0.75 x 17 x 3 | 7.5 to 9.5 |
| RTAP-18-50-B9-AB | 24 | 5.00 | 8 | #5 | 0.58 | 59 | 0.75 x 17 x 3 | 7.5 to 9.5 |
| RTAP-18-50-V9-AB | 24 | 5.00 | 8 | #5 | 0.58 | 59 | 0.75 x 17 x 3 | 7.5 to 9.5 |
| RTAP-18-60-B9-AB | 24 | 5.00 | 8 | #5 | 0.58 | 59 | 0.75 x 17 x 3 | 8.75 to 10.25 |
| RTAP-18-60-V9-AB | 24 | 5.00 | 8 | #5 | 0.58 | 59 | 0.75 x 17 x 3 | 8.75 to 10.25 |
| RTAP-18-70-B9-AB | 24 | 5.00 | 8 | #5 | 0.58 | 59 | 1 x 36 x 4 | 9.875 to 11.25 |
| RTAP-20-50-A9-AB | 24 | 5.00 | 8 | #5 | 0.58 | 59 | 0.75 x 17 x 3 | 7.5 to 9.5 |
| RTAP-20-50-B9-AB | 24 | 5.00 | 8 | #5 | 0.58 | 59 | 0.75 x 17 x 3 | 7.5 to 9.5 |
| RTAP-20-50-V9-AB | 24 | 5.00 | 8 | #5 | 0.58 | 59 | 0.75 x 17 x 3 | 7.5 to 9.5 |
| RTAP-20-60-B9-AB | 24 | 5.00 | 8 | #5 | 0.58 | 59 | 0.75 x 17 x 3 | 8.75 to 10.25 |
| RTAP-20-60-V9-AB | 24 | 5.00 | 8 | #5 | 0.58 | 59 | 0.75 x 17 x 3 | 8.75 to 10.25 |
| RTAP-20-70-B9-AB | 24 | 5.00 | 8 | #5 | 0.58 | 59 | 1 x 36 x 4 | 9.875 to 11.25 |
| RTAP-23-60-B9-AB | 24 | 5.00 | 8 | #5 | 0.58 | 59 | 0.75 x 17 x 3 | 8.75 to 10.25 |
| RTAP-23-60-V9-AB | 24 | 5.00 | 8 | #5 | 0.58 | 59 | 0.75 x 17 x 3 | 8.75 to 10.25 |
| RTAP-23-70-B9-AB | 24 | 5.00 | 8 | #5 | 0.58 | 59 | 1 x 36 x 4 | 9.875 to 11.25 |
| RTAP-23-80-B9-AB | 24 | 5.00 | 8 | #5 | 0.58 | 59 | 1 x 36 x 4 | 11 to 12.125 |
| RTAP-23-80-V9-AB | 24 | 5.00 | 8 | #5 | 0.58 | 59 | 1 x 36 x 4 | 11 to 12.125 |

**Notes:**

1. **The above information is for estimating purposes only. Do not use for construction.**
2. **Analysis is based upon Brom's method of foundation design.**
3. **All of the designs are based upon the following soil parameters:**
   - **a. Soil is homogeneous, non-cohesive**
   - **b. $\phi$ = 30 degrees**
   - **c. $\gamma$ = 110 pcf.**
   - **d. Water table is below bottom of foundation.**
   - **e. Site grade is 7H:1V or flatter.**
4. **Concrete 28 day compressive strength = 3000 psi.**
5. **Reinforcing meets the requirements of ASTM A615 grade 60.**
6. **Concrete design is in accordance with ACI 318-95.**
7. **Concrete is cast against undisturbed soil.**
8. **All reinforcing must be covered by a minimum of 3" of concrete on all sides.**
9. **All vertical reinforcing bars are equally spaced.**
10. **#4 reinforcing bars are used as hoops and are spaced on 12" centers.**

NOT FOR CONSTRUCTION
FOR ESTIMATION ONLY

*The information above is provided for preliminary estimating use only and may not be used as final or construction designs.*

# Round Tapered Aluminum Poles (25'-50')

## FOUNDATIONS (25' to 50') RTAP-AB

| Catalog Number | Foundation Data | | | | | | Anchor Bolt Data | |
|---|---|---|---|---|---|---|---|---|
| | Caisson Diameter (in) | Caisson Depth (ft) | Vert Rebar Qty | Vert Rebar Size | Concrete Volume (Cu Yds) | Steel Weight (lbs) | Dia x Lgth x Hk | Bolt Circle Range (in) |
| RTAP-25-60-B9-AB* | 24 | 5.00 | 8 | #5 | 0.58 | 59 | 0.75 x 17 x 3 | 8.75 to 10.25 |
| RTAP-25-60-V9-AB | 24 | 5.00 | 8 | #5 | 0.58 | 59 | 0.75 x 17 x 3 | 8.75 to 10.25 |
| RTAP-25-70-B9-AB | 24 | 5.00 | 8 | #5 | 0.58 | 59 | 1 x 36 x 4 | 9.875 to 11.25 |
| RTAP-25-80-B9-AB | 24 | 5.00 | 8 | #5 | 0.58 | 59 | 1 x 36 x 4 | 11 to 12.125 |
| RTAP-25-80-V9-AB | 24 | 5.00 | 8 | #5 | 0.58 | 59 | 1 x 36 x 4 | 11 to 12.125 |
| RTAP-28-70-B9-AB* | 24 | 6.00 | 8 | #5 | 0.70 | 71 | 1 x 36 x 4 | 9.875 to 11.25 |
| RTAP-28-80-B9-AB | 24 | 6.00 | 8 | #5 | 0.70 | 71 | 1 x 36 x 4 | 11 to 12.125 |
| RTAP-28-80-V9-AB | 24 | 6.00 | 8 | #5 | 0.70 | 71 | 1 x 36 x 4 | 11 to 12.125 |
| RTAP-28-80-H9-AB | 24 | 6.00 | 8 | #5 | 0.70 | 71 | 1 x 36 x 4 | 11 to 12.125 |
| RTAP-28-10-V9-AB | 30 | 6.00 | 8 | #5 | 1.09 | 77 | 1 x 36 x 4 | 14.50 |
| RTAP-28-10-H9-AB | 30 | 6.00 | 8 | #5 | 1.09 | 77 | 1.25 x 42 x 6 | 14.50 |
| RTAP-30-70-B9-AB* | 30 | 6.00 | 8 | #5 | 1.09 | 77 | 1 x 36 x 4 | 9.875 to 11.25 |
| RTAP-30-80-B9-AB* | 30 | 6.00 | 8 | #5 | 1.09 | 77 | 1 x 36 x 4 | 11 to 12.125 |
| RTAP-30-80-V9-AB | 30 | 6.00 | 8 | #5 | 1.09 | 77 | 1 x 36 x 4 | 11 to 12.125 |
| RTAP-30-80-H9-AB | 30 | 6.00 | 8 | #5 | 1.09 | 77 | 1 x 36 x 4 | 11 to 12.125 |
| RTAP-30-10-V9-AB | 30 | 6.00 | 8 | #5 | 1.09 | 77 | 1 x 36 x 4 | 14.50 |
| RTAP-30-10-H9-AB | 30 | 6.00 | 8 | #5 | 1.09 | 77 | 1.25 x 42 x 6 | 14.50 |
| RTAP-33-80-B9-AB* | 30 | 7.00 | 8 | #6 | 1.27 | 115 | 1 x 36 x 4 | 11 to 12.125 |
| RTAP-33-80-V9-AB | 30 | 7.00 | 8 | #6 | 1.27 | 115 | 1 x 36 x 4 | 11 to 12.125 |
| RTAP-33-80-H9-AB | 30 | 7.00 | 8 | #6 | 1.27 | 115 | 1 x 36 x 4 | 11 to 12.125 |
| RTAP-33-10-V9-AB | 30 | 7.00 | 8 | #6 | 1.27 | 115 | 1 x 36 x 4 | 14.50 |
| RTAP-33-10-H9-AB | 30 | 7.00 | 8 | #6 | 1.27 | 115 | 1.25 x 42 x 6 | 14.50 |
| RTAP-35-80-B9-AB* | 30 | 7.00 | 10 | #6 | 1.27 | 134 | 1 x 36 x 4 | 11 to 12.125 |
| RTAP-35-80-V9-AB | 30 | 7.00 | 10 | #6 | 1.27 | 134 | 1 x 36 x 4 | 11 to 12.125 |
| RTAP-35-80-H9-AB | 30 | 7.00 | 10 | #6 | 1.27 | 134 | 1 x 36 x 4 | 11 to 12.125 |
| RTAP-35-10-V9-AB | 30 | 7.00 | 10 | #6 | 1.27 | 134 | 1 x 36 x 4 | 14.50 |
| RTAP-35-10-H9-AB | 30 | 7.00 | 10 | #6 | 1.27 | 134 | 1.25 x 42 x 6 | 14.50 |
| RTAP-37-80-V9-AB* | 30 | 7.00 | 10 | #6 | 1.27 | 134 | 1 x 36 x 4 | 11 to 12.125 |
| RTAP-37-80-H9-AB | 30 | 7.00 | 10 | #6 | 1.27 | 134 | 1 x 36 x 4 | 11 to 12.125 |
| RTAP-37-10-V9-AB | 30 | 7.00 | 10 | #6 | 1.27 | 134 | 1 x 36 x 4 | 14.50 |
| RTAP-37-10-H9-AB | 30 | 7.00 | 10 | #6 | 1.27 | 134 | 1.25 x 42 x 6 | 14.50 |
| RTAP-39-80-V9-AB* | 30 | 7.00 | 12 | #6 | 1.27 | 154 | 1 x 36 x 4 | 11 to 12.125 |
| RTAP-39-80-H9-AB | 30 | 7.00 | 12 | #6 | 1.27 | 154 | 1 x 36 x 4 | 11 to 12.125 |
| RTAP-39-10-V9-AB | 30 | 7.00 | 12 | #6 | 1.27 | 154 | 1 x 36 x 4 | 14.50 |
| RTAP-39-10-H9-AB | 30 | 7.00 | 12 | #6 | 1.27 | 154 | 1.25 x 42 x 6 | 14.50 |
| RTAP-48-10-H9-AB+ | 30 | 8.00 | 14 | #6 | 1.45 | 200 | 1.25 x 42 x 6 | 14.50 |
| RTAP-50-10-H9-AB+ | 30 | 8.00 | 14 | #6 | 1.45 | 200 | 1.25 x 42 x 6 | 14.50 |

Notes:

1. The above information is for estimating purposes only. Do not use for construction.
2. Analysis is based upon Brom's method of foundation design.
3. All of the designs are based upon the following soil parameters:
   a. Soil is homogeneous, non-cohesive
   b. $\phi$ = 30 degrees
   c. $\gamma$ = 110 pcf.
   d. Water table is below bottom of foundation.
   e. Site grade is 7H:1V or flatter.
4. Concrete 28 day compressive strength = 3000 psi.
5. Reinforcing meets the requirements of ASTM A615 grade 60.
6. Concrete design is in accordance with ACI 318-95.
7. Concrete is cast against undisturbed soil.
8. All reinforcing must be covered by a minimum of 3" of concrete on all sides.
9. All vertical reinforcing bars are equally spaced.
10. #4 reinforcing bars are used as hoops and are spaced on 12" centers.

*The information above is provided for preliminary estimating use only and may not be used as final or construction designs.*

NOT FOR CONSTRUCTION.
FOR ESTIMATION ONLY.

# Round Tapered Aluminum Poles

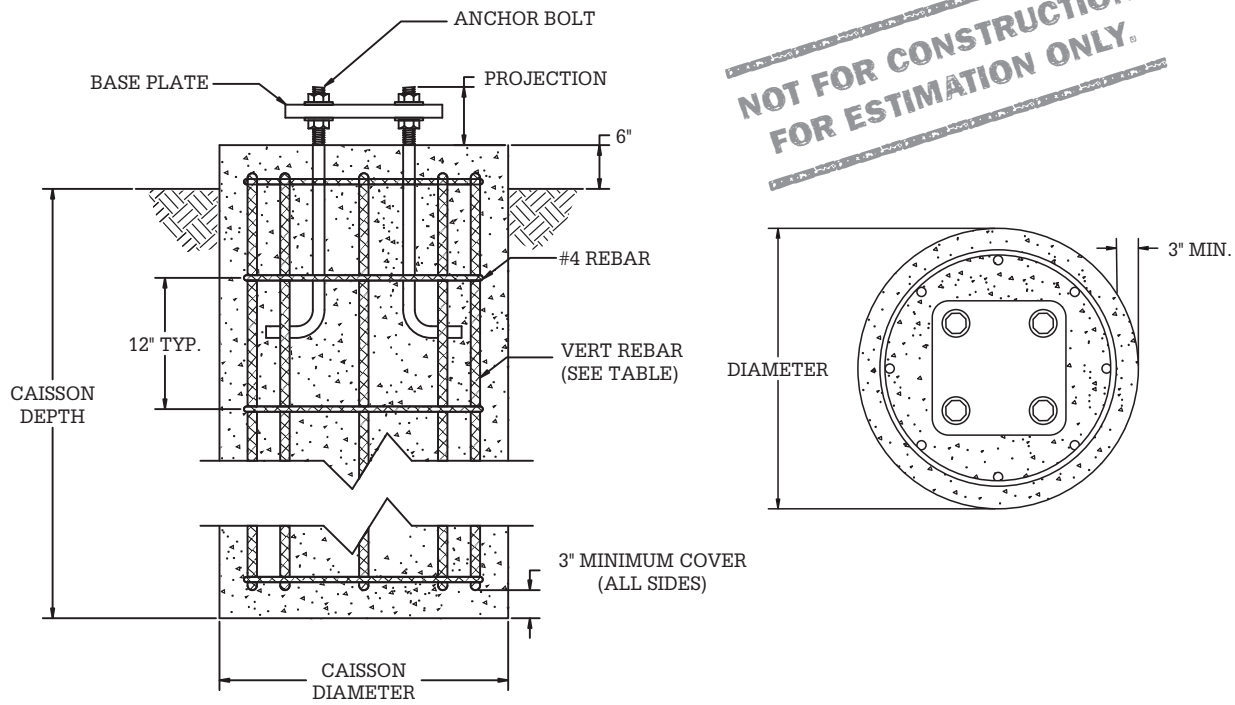


1. SEE TABLE FOR ACTUAL BOLT QUANTITY, BOLTS AND REBAR QUANTITIES SHOWN ARE FOR ILLUSTRATION PURPOSES ONLY.

*The information above is provided for preliminary estimating use only and may not be used as final or construction designs.*

MAVERICK®
POLES AND STRUCTURE, LLC.

# Round Non-Tapered Aluminum Poles

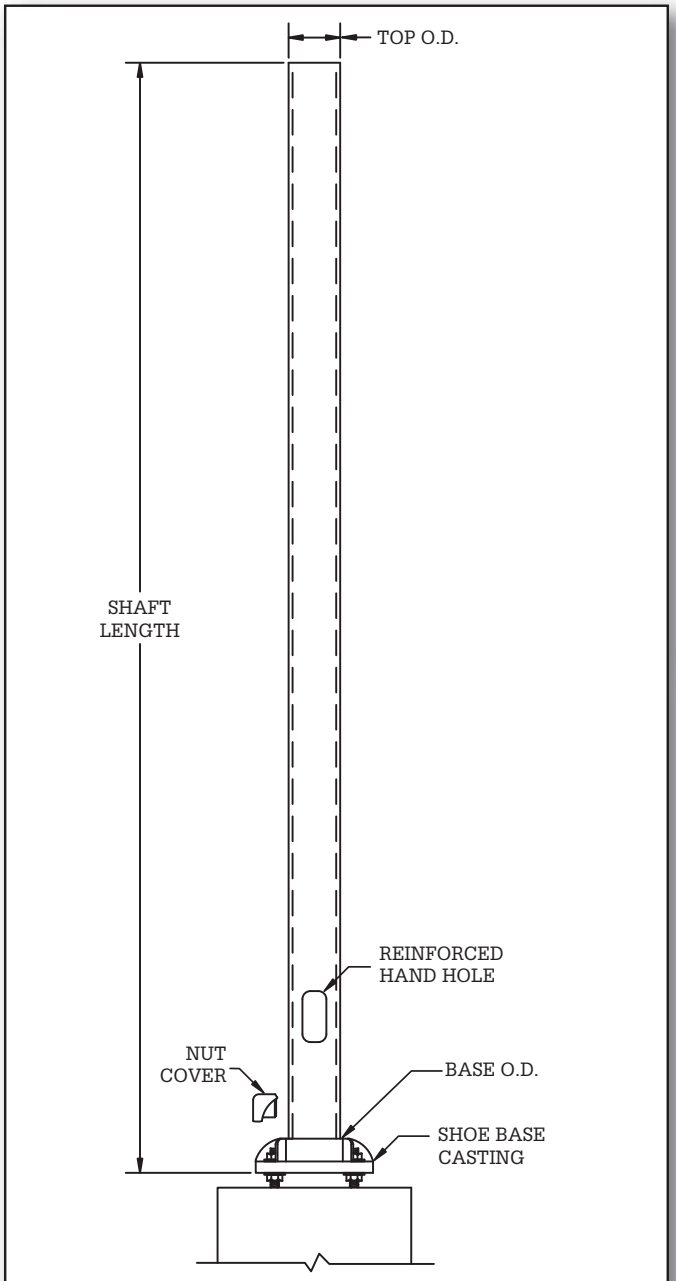


DETAIL | **POLE ASSEMBLY**

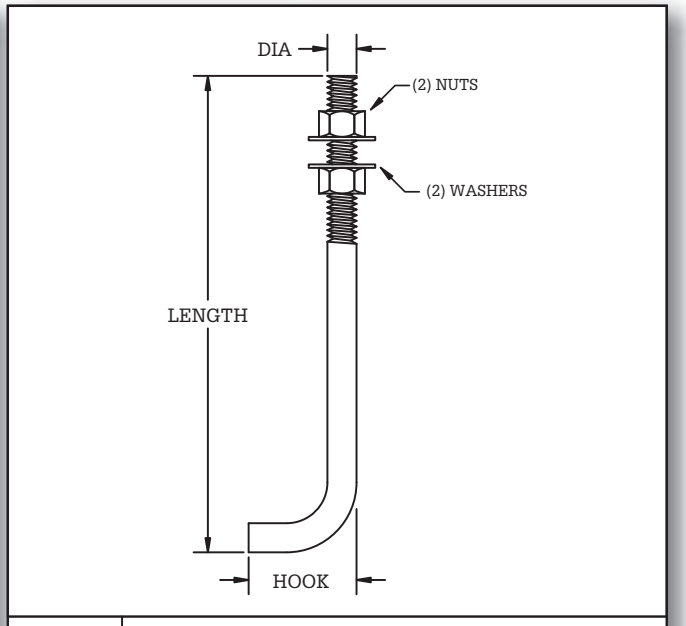


DETAIL 1 | **ANCHOR BOLT**

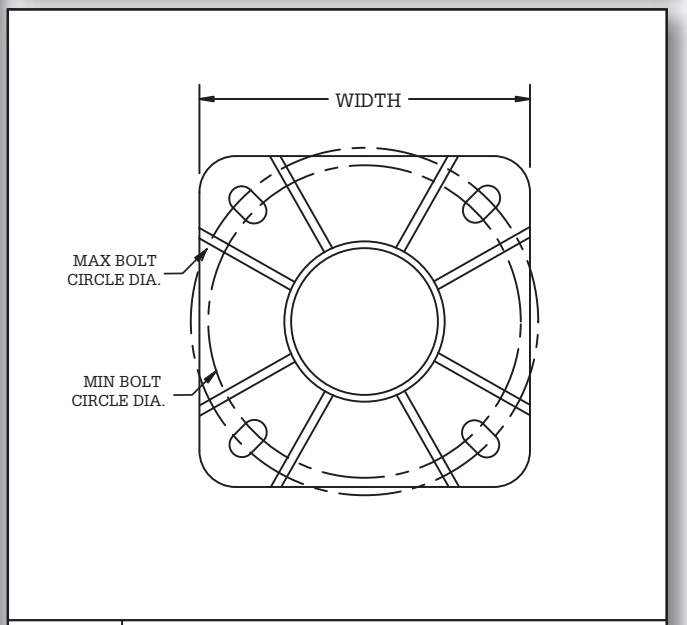


DETAIL 2 | **BASEPLATE (SHOE-BASE CASTING)**

MAVERICK®
POLES AND STRUCTURE, LLC.

# Round Non-Tapered Aluminum Poles

## STRUCTURE DATA

| Catalog Number | Gross Weight (Lbs) | Pole Shaft Data | | | | Base Plate Data | | Anchor Bolt Data |
|---|---|---|---|---|---|---|---|---|
| | | Base O.D. (in) | Top O.D. (in) | Wall Thk. (in) | Shaft Length (ft) | Bolt Circle Range (in) | Plate Width (in) | Dia x Lgth x Hk |
| RNAP-08-40-A9-AB | 31 | 4.0 | 4.0 | 0.125 | 8.00 | 6.5 to 8.25 | 8.75 | 0.75 x 17 x 3 |
| RNAP-08-45-A9-AB | 33 | 4.5 | 4.5 | 0.125 | 8.00 | 7.0 to 8.625 | 8.75 | 0.75 x 17 x 3 |
| RNAP-08-45-V9-AB | 40 | 4.5 | 4.5 | 0.188 | 8.00 | 7.0 to 8.625 | 8.75 | 0.75 x 17 x 3 |
| RNAP-10-40-A9-AB | 34 | 4.0 | 4.0 | 0.125 | 10.00 | 6.5 to 8.25 | 8.75 | 0.75 x 17 x 3 |
| RNAP-10-45-A9-AB | 37 | 4.5 | 4.5 | 0.125 | 10.00 | 7.0 to 8.625 | 8.75 | 0.75 x 17 x 3 |
| RNAP-10-45-V9-AB | 46 | 4.5 | 4.5 | 0.188 | 10.00 | 7.0 to 8.625 | 8.75 | 0.75 x 17 x 3 |
| RNAP-10-50-A9-AB | 39 | 5.0 | 5.0 | 0.125 | 10.00 | 7.5 to 9.5 | 9.25 | 0.75 x 17 x 3 |
| RNAP-12-40-A9-AB | 38 | 4.0 | 4.0 | 0.125 | 12.00 | 6.5 to 8.25 | 8.75 | 0.75 x 17 x 3 |
| RNAP-12-45-A9-AB | 41 | 4.5 | 4.5 | 0.125 | 12.00 | 7.0 to 8.625 | 8.75 | 0.75 x 17 x 3 |
| RNAP-12-45-V9-AB | 52 | 4.5 | 4.5 | 0.188 | 12.00 | 7.0 to 8.625 | 8.75 | 0.75 x 17 x 3 |
| RNAP-12-50-A9-AB | 44 | 5.0 | 5.0 | 0.125 | 12.00 | 7.5 to 9.5 | 9.25 | 0.75 x 17 x 3 |
| RNAP-12-50-B9-AB | 50 | 5.0 | 5.0 | 0.156 | 12.00 | 7.5 to 9.5 | 9.25 | 0.75 x 17 x 3 |
| RNAP-12-50-V9-AB | 57 | 5.0 | 5.0 | 0.188 | 12.00 | 7.5 to 9.5 | 9.25 | 0.75 x 17 x 3 |
| RNAP-14-40-A9-AB | 41 | 4.0 | 4.0 | 0.125 | 14.00 | 6.5 to 8.25 | 8.75 | 0.75 x 17 x 3 |
| RNAP-14-45-A9-AB | 45 | 4.5 | 4.5 | 0.125 | 14.00 | 7.0 to 8.625 | 8.75 | 0.75 x 17 x 3 |
| RNAP-14-45-V9-AB | 58 | 4.5 | 4.5 | 0.188 | 14.00 | 7.0 to 8.625 | 8.75 | 0.75 x 17 x 3 |
| RNAP-14-50-A9-AB | 48 | 5.0 | 5.0 | 0.125 | 14.00 | 7.5 to 9.5 | 9.25 | 0.75 x 17 x 3 |
| RNAP-14-50-B9-AB | 56 | 5.0 | 5.0 | 0.156 | 14.00 | 7.5 to 9.5 | 9.25 | 0.75 x 17 x 3 |
| RNAP-14-50-V9-AB | 63 | 5.0 | 5.0 | 0.188 | 14.00 | 7.5 to 9.5 | 9.25 | 0.75 x 17 x 3 |
| RNAP-16-40-A9-AB | 45 | 4.0 | 4.0 | 0.125 | 16.00 | 6.5 to 8.25 | 8.75 | 0.75 x 17 x 3 |
| RNAP-16-45-A9-AB | 49 | 4.5 | 4.5 | 0.125 | 16.00 | 7.0 to 8.625 | 8.75 | 0.75 x 17 x 3 |
| RNAP-16-45-V9-AB | 64 | 4.5 | 4.5 | 0.188 | 16.00 | 7.0 to 8.625 | 8.75 | 0.75 x 17 x 3 |
| RNAP-16-50-A9-AB | 53 | 5.0 | 5.0 | 0.125 | 16.00 | 7.5 to 9.5 | 9.25 | 0.75 x 17 x 3 |
| RNAP-16-50-B9-AB | 61 | 5.0 | 5.0 | 0.156 | 16.00 | 7.5 to 9.5 | 9.25 | 0.75 x 17 x 3 |
| RNAP-16-50-V9-AB | 70 | 5.0 | 5.0 | 0.188 | 16.00 | 7.5 to 9.5 | 9.25 | 0.75 x 17 x 3 |
| RNAP-16-60-B9-AB | 77 | 6.0 | 6.0 | 0.156 | 16.00 | 8.75 to 10.25 | 10.25 | 0.75 x 17 x 3 |
| RNAP-16-60-V9-AB | 89 | 6.0 | 6.0 | 0.188 | 16.00 | 8.75 to 10.25 | 10.25 | 0.75 x 17 x 3 |
| RNAP-18-45-V9-AB | 70 | 4.5 | 4.5 | 0.188 | 18.00 | 7.0 to 8.625 | 8.75 | 0.75 x 17 x 3 |
| RNAP-18-50-A9-AB | 57 | 5.0 | 5.0 | 0.125 | 18.00 | 7.5 to 9.5 | 9.25 | 0.75 x 17 x 3 |
| RNAP-18-50-B9-AB | 67 | 5.0 | 5.0 | 0.156 | 18.00 | 7.5 to 9.5 | 9.25 | 0.75 x 17 x 3 |
| RNAP-18-50-V9-AB | 77 | 5.0 | 5.0 | 0.188 | 18.00 | 7.5 to 9.5 | 9.25 | 0.75 x 17 x 3 |
| RNAP-18-60-V9-AB | 96 | 6.0 | 6.0 | 0.188 | 18.00 | 8.75 to 10.25 | 10.25 | 0.75 x 17 x 3 |
| RNAP-20-45-V9-AB | 76 | 4.5 | 4.5 | 0.188 | 20.00 | 7.0 to 8.625 | 8.75 | 0.75 x 17 x 3 |
| RNAP-20-50-A9-AB | 62 | 5.0 | 5.0 | 0.125 | 20.00 | 7.5 to 9.5 | 9.25 | 0.75 x 17 x 3 |
| RNAP-20-50-B9-AB | 73 | 5.0 | 5.0 | 0.156 | 20.00 | 7.5 to 9.5 | 9.25 | 0.75 x 17 x 3 |
| RNAP-20-50-V9-AB | 84 | 5.0 | 5.0 | 0.188 | 20.00 | 7.5 to 9.5 | 9.25 | 0.75 x 17 x 3 |
| RNAP-20-60-B9-AB | 90 | 6.0 | 6.0 | 0.156 | 20.00 | 8.75 to 10.25 | 10.25 | 0.75 x 17 x 3 |
| RNAP-20-60-V9-AB | 104 | 6.0 | 6.0 | 0.188 | 20.00 | 8.75 to 10.25 | 10.25 | 0.75 x 17 x 3 |
| RNAP-25-45-V9-AB* | 99 | 4.5 | 4.5 | 0.188 | 25.00 | 7.0 to 8.625 | 8.75 | 0.75 x 17 x 3 |
| RNAP-25-60-B9-AB* | 115 | 6.0 | 6.0 | 0.156 | 25.00 | 8.75 to 10.25 | 10.25 | 0.75 x 17 x 3 |
| RNAP-25-60-V9-AB | 124 | 6.0 | 6.0 | 0.188 | 25.00 | 8.75 to 10.25 | 10.25 | 0.75 x 17 x 3 |
| RNAP-30-60-V9-AB* | 151 | 6.0 | 6.0 | 0.188 | 30.00 | 8.75 to 10.25 | 10.25 | 0.75 x 17 x 3 |

* Includes factory-installed vibration damper.

# Round Non-Tapered Aluminum Poles

## STRUCTURE LOADING CAPACITIES

| Catalog Number | Maximum Loading | | | | | | | | | |
|---|---|---|---|---|---|---|---|---|---|---|
| | 70 mph | | 80 mph | | 90 mph | | 100 mph | | 110 mph | |
| | EPA ($ft^2$) | Wt. (lbs) | EPA ($ft^2$) | Wt. (lbs) | EPA ($ft^2$) | Wt. (lbs) | EPA ($ft^2$) | Wt. (lbs) | EPA ($ft^2$) | Wt. (lbs) |
| RNAP-08-40-A9-AB | 17.8 | 445 | 13.2 | 330 | 10.1 | 253 | 8.0 | 200 | 6.5 | 163 |
| RNAP-08-45-A9-AB | 23.1 | 578 | 17.2 | 430 | 13.3 | 333 | 10.7 | 268 | 8.8 | 220 |
| RNAP-08-45-V9-AB | 34.0 | 850 | 25.6 | 640 | 20.0 | 500 | 16.1 | 403 | 13.3 | 333 |
| RNAP-10-40-A9-AB | 13.2 | 330 | 9.8 | 245 | 7.2 | 180 | 5.5 | 138 | 4.5 | 113 |
| RNAP-10-45-A9-AB | 16.9 | 423 | 12.5 | 313 | 9.5 | 238 | 7.6 | 190 | 6.2 | 155 |
| RNAP-10-45-V9-AB | 25.6 | 640 | 19.2 | 480 | 14.8 | 370 | 11.9 | 298 | 9.6 | 240 |
| RNAP-10-50-A9-AB | 21.5 | 538 | 16.0 | 400 | 12.5 | 313 | 10.0 | 250 | 8.1 | 203 |
| RNAP-12-40-A9-AB | 9.9 | 248 | 7.1 | 178 | 5.1 | 128 | 3.8 | 95 | 3.1 | 78 |
| RNAP-12-45-A9-AB | 13.2 | 330 | 9.5 | 238 | 7.1 | 178 | 5.6 | 140 | 4.5 | 113 |
| RNAP-12-45-V9-AB | 20.2 | 505 | 14.9 | 373 | 11.4 | 285 | 9.1 | 228 | 7.4 | 185 |
| RNAP-12-50-A9-AB | 16.6 | 415 | 12.1 | 303 | 9.4 | 235 | 7.4 | 185 | 6.0 | 150 |
| RNAP-12-50-B9-AB | 21.1 | 528 | 15.5 | 388 | 12.1 | 303 | 9.6 | 240 | 7.9 | 198 |
| RNAP-12-50-V9-AB | 25.5 | 638 | 19.1 | 478 | 14.8 | 370 | 11.9 | 298 | 9.6 | 240 |
| RNAP-14-40-A9-AB | 7.2 | 180 | 4.8 | 120 | 3.3 | 83 | 2.2 | 55 | 1.8 | 45 |
| RNAP-14-45-A9-AB | 9.8 | 245 | 6.8 | 170 | 4.9 | 123 | 3.9 | 98 | 3.1 | 78 |
| RNAP-14-45-V9-AB | 15.8 | 395 | 11.4 | 285 | 8.6 | 215 | 6.8 | 170 | 5.4 | 135 |
| RNAP-14-50-A9-AB | 12.8 | 320 | 9.2 | 230 | 7.1 | 178 | 5.5 | 138 | 4.5 | 113 |
| RNAP-14-50-B9-AB | 16.7 | 418 | 12.1 | 303 | 9.4 | 235 | 7.4 | 185 | 6.0 | 150 |
| RNAP-14-50-V9-AB | 20.5 | 513 | 15.1 | 378 | 11.6 | 290 | 9.3 | 233 | 7.5 | 188 |
| RNAP-16-40-A9-AB | 5.2 | 130 | 3.3 | 83 | 1.9 | 48 | 1.2 | 30 | 0.8 | 20 |
| RNAP-16-45-A9-AB | 7.4 | 185 | 4.9 | 123 | 3.3 | 83 | 2.5 | 63 | 1.9 | 48 |
| RNAP-16-45-V9-AB | 12.6 | 315 | 8.8 | 220 | 6.5 | 163 | 5.1 | 128 | 4.0 | 100 |
| RNAP-16-50-A9-AB | 10.0 | 250 | 6.9 | 173 | 5.2 | 130 | 4.0 | 100 | 3.2 | 80 |
| RNAP-16-50-B9-AB | 13.3 | 333 | 9.4 | 235 | 7.2 | 180 | 5.6 | 140 | 4.5 | 113 |
| RNAP-16-50-V9-AB | 16.5 | 413 | 11.9 | 298 | 9.2 | 230 | 7.2 | 180 | 5.8 | 145 |
| RNAP-16-60-B9-AB | 21.3 | 533 | 16.0 | 400 | 12.5 | 313 | 9.9 | 248 | 8.0 | 200 |
| RNAP-16-60-V9-AB | 26.2 | 655 | 19.8 | 495 | 15.3 | 383 | 12.2 | 305 | 10.0 | 250 |
| RNAP-18-45-V9-AB | 10.0 | 250 | 6.7 | 168 | 4.7 | 118 | 3.6 | 90 | 2.8 | 70 |
| RNAP-18-50-A9-AB | 7.6 | 190 | 5.1 | 128 | 3.6 | 90 | 2.8 | 70 | 2.1 | 53 |
| RNAP-18-50-B9-AB | 10.5 | 263 | 7.2 | 180 | 5.4 | 135 | 4.1 | 103 | 3.3 | 83 |
| RNAP-18-50-V9-AB | 13.3 | 333 | 9.4 | 235 | 8.0 | 200 | 5.5 | 138 | 4.5 | 113 |
| RNAP-18-60-V9-AB | 21.8 | 545 | 16.4 | 410 | 12.6 | 315 | 10.0 | 250 | 8.1 | 203 |
| RNAP-20-45-V9-AB | 8.0 | 200 | 5.1 | 128 | 3.4 | 85 | 2.5 | 63 | 1.9 | 48 |
| RNAP-20-50-A9-AB | 5.8 | 145 | 3.5 | 88 | 2.5 | 63 | 1.8 | 45 | 1.3 | 33 |
| RNAP-20-50-B9-AB | 8.5 | 213 | 5.5 | 138 | 4.0 | 100 | 3.1 | 78 | 2.4 | 60 |
| RNAP-20-50-V9-AB | 11.1 | 278 | 7.5 | 188 | 5.6 | 140 | 4.2 | 105 | 3.3 | 83 |
| RNAP-20-60-B9-AB | 14.8 | 370 | 10.9 | 273 | 8.4 | 210 | 6.5 | 163 | 5.2 | 130 |
| RNAP-20-60-V9-AB | 18.7 | 468 | 13.9 | 348 | 10.7 | 268 | 8.4 | 210 | 6.7 | 168 |
| RNAP-25-45-V9-AB* | 3.6 | 90 | 1.5 | 38 | --- | --- | --- | --- | --- | --- |
| RNAP-25-60-B9-AB* | 8.6 | 215 | 6.1 | 153 | 4.5 | 113 | 3.3 | 83 | 2.5 | 63 |
| RNAP-25-60-V9-AB | 11.5 | 288 | 8.4 | 210 | 6.2 | 155 | 4.7 | 118 | 3.6 | 90 |
| RNAP-30-60-V9-AB* | 6.1 | 153 | 4.1 | 103 | 2.8 | 70 | 1.9 | 48 | 1.3 | 33 |

* Includes factory-installed vibration damper.

MAVERICK®
POLES AND STRUCTURE, LLC.

# Round Non-Tapered Aluminum Poles

## FOUNDATIONS (RNAP-AB)

| Catalog Number | Foundation Data | | | | | | Anchor Bolt Data | |
|---|---|---|---|---|---|---|---|---|
| | Caisson Diameter (in) | Caisson Depth (ft) | Vert Rebar Qty | Vert Rebar Size | Concrete Volume (Cu Yds) | Steel Weight (lbs) | Dia x Lgth x Hk | Bolt Circle Range (in) |
| RNAP-08-40-A9-AB | 24 | 5.00 | 8 | #5 | 0.58 | 59 | 0.75 x 17 x 3 | 6.5 to 8.25 |
| RNAP-08-45-A9-AB | 24 | 5.00 | 8 | #5 | 0.58 | 59 | 0.75 x 17 x 3 | 7.0 to 8.625 |
| RNAP-08-45-V9-AB | 24 | 5.00 | 8 | #5 | 0.58 | 59 | 0.75 x 17 x 3 | 7.0 to 8.625 |
| RNAP-10-40-A9-AB | 24 | 5.00 | 8 | #5 | 0.58 | 59 | 0.75 x 17 x 3 | 6.5 to 8.25 |
| RNAP-10-45-A9-AB | 24 | 5.00 | 8 | #5 | 0.58 | 59 | 0.75 x 17 x 3 | 7.0 to 8.625 |
| RNAP-10-45-V9-AB | 24 | 5.00 | 8 | #5 | 0.58 | 59 | 0.75 x 17 x 3 | 7.0 to 8.625 |
| RNAP-10-50-A9-AB | 24 | 5.00 | 8 | #5 | 0.58 | 59 | 0.75 x 17 x 3 | 7.5 to 9.5 |
| RNAP-12-40-A9-AB | 24 | 5.00 | 8 | #5 | 0.58 | 59 | 0.75 x 17 x 3 | 6.5 to 8.25 |
| RNAP-12-45-A9-AB | 24 | 5.00 | 8 | #5 | 0.58 | 59 | 0.75 x 17 x 3 | 7.0 to 8.625 |
| RNAP-12-45-V9-AB | 24 | 5.00 | 8 | #5 | 0.58 | 59 | 0.75 x 17 x 3 | 7.0 to 8.625 |
| RNAP-12-50-A9-AB | 24 | 5.00 | 8 | #5 | 0.58 | 59 | 0.75 x 17 x 3 | 7.5 to 9.5 |
| RNAP-12-50-B9-AB | 24 | 5.00 | 8 | #5 | 0.58 | 59 | 0.75 x 17 x 3 | 7.5 to 9.5 |
| RNAP-12-50-V9-AB | 24 | 5.00 | 8 | #5 | 0.58 | 59 | 0.75 x 17 x 3 | 7.5 to 9.5 |
| RNAP-14-40-A9-AB | 24 | 5.00 | 8 | #5 | 0.58 | 59 | 0.75 x 17 x 3 | 6.5 to 8.25 |
| RNAP-14-45-A9-AB | 24 | 5.00 | 8 | #5 | 0.58 | 59 | 0.75 x 17 x 3 | 7.0 to 8.625 |
| RNAP-14-45-V9-AB | 24 | 5.00 | 8 | #5 | 0.58 | 59 | 0.75 x 17 x 3 | 7.0 to 8.625 |
| RNAP-14-50-A9-AB | 24 | 5.00 | 8 | #5 | 0.58 | 59 | 0.75 x 17 x 3 | 7.5 to 9.5 |
| RNAP-14-50-B9-AB | 24 | 5.00 | 8 | #5 | 0.58 | 59 | 0.75 x 17 x 3 | 7.5 to 9.5 |
| RNAP-14-50-V9-AB | 24 | 5.00 | 8 | #5 | 0.58 | 59 | 0.75 x 17 x 3 | 7.5 to 9.5 |
| RNAP-16-40-A9-AB | 24 | 5.00 | 8 | #5 | 0.58 | 59 | 0.75 x 17 x 3 | 6.5 to 8.25 |
| RNAP-16-45-A9-AB | 24 | 5.00 | 8 | #5 | 0.58 | 59 | 0.75 x 17 x 3 | 7.0 to 8.625 |
| RNAP-16-45-V9-AB | 24 | 5.00 | 8 | #5 | 0.58 | 59 | 0.75 x 17 x 3 | 7.0 to 8.625 |
| RNAP-16-50-A9-AB | 24 | 5.00 | 8 | #5 | 0.58 | 59 | 0.75 x 17 x 3 | 7.5 to 9.5 |
| RNAP-16-50-B9-AB | 24 | 5.00 | 8 | #5 | 0.58 | 59 | 0.75 x 17 x 3 | 7.5 to 9.5 |
| RNAP-16-50-V9-AB | 24 | 5.00 | 8 | #5 | 0.58 | 59 | 0.75 x 17 x 3 | 7.5 to 9.5 |
| RNAP-16-60-B9-AB | 24 | 5.00 | 8 | #5 | 0.58 | 59 | 0.75 x 17 x 3 | 8.75 to 10.25 |
| RNAP-16-60-V9-AB | 24 | 5.00 | 8 | #5 | 0.58 | 59 | 0.75 x 17 x 3 | 8.75 to 10.25 |
| RNAP-18-45-V9-AB | 24 | 5.00 | 8 | #5 | 0.58 | 59 | 0.75 x 17 x 3 | 7.0 to 8.625 |
| RNAP-18-50-A9-AB | 24 | 5.00 | 8 | #5 | 0.58 | 59 | 0.75 x 17 x 3 | 7.5 to 9.5 |
| RNAP-18-50-B9-AB | 24 | 5.00 | 8 | #5 | 0.58 | 59 | 0.75 x 17 x 3 | 7.5 to 9.5 |
| RNAP-18-50-V9-AB | 24 | 5.00 | 8 | #5 | 0.58 | 59 | 0.75 x 17 x 3 | 7.5 to 9.5 |
| RNAP-18-60-V9-AB | 24 | 5.00 | 8 | #5 | 0.58 | 59 | 0.75 x 17 x 3 | 8.75 to 10.25 |
| RNAP-20-45-V9-AB | 24 | 5.00 | 8 | #5 | 0.58 | 59 | 0.75 x 17 x 3 | 7.0 to 8.625 |
| RNAP-20-50-A9-AB | 24 | 5.00 | 8 | #5 | 0.58 | 59 | 0.75 x 17 x 3 | 7.5 to 9.5 |
| RNAP-20-50-B9-AB | 24 | 5.00 | 8 | #5 | 0.58 | 59 | 0.75 x 17 x 3 | 7.5 to 9.5 |
| RNAP-20-50-V9-AB | 24 | 5.00 | 8 | #5 | 0.58 | 59 | 0.75 x 17 x 3 | 7.5 to 9.5 |
| RNAP-20-60-B9-AB | 24 | 5.00 | 8 | #5 | 0.58 | 59 | 0.75 x 17 x 3 | 8.75 to 10.25 |
| RNAP-20-60-V9-AB | 24 | 5.00 | 8 | #5 | 0.58 | 59 | 0.75 x 17 x 3 | 8.75 to 10.25 |
| RNAP-25-45-V9-AB* | 24 | 6.00 | 8 | #5 | 0.70 | 71 | 0.75 x 17 x 3 | 7.0 to 8.625 |
| RNAP-25-60-B9-AB* | 24 | 6.00 | 8 | #5 | 0.70 | 71 | 0.75 x 17 x 3 | 8.75 to 10.25 |
| RNAP-25-60-V9-AB | 24 | 6.00 | 8 | #5 | 0.70 | 71 | 0.75 x 17 x 3 | 8.75 to 10.25 |
| RNAP-30-60-V9-AB* | 24 | 6.00 | 8 | #5 | 0.70 | 71 | 0.75 x 17 x 3 | 8.75 to 10.25 |

**Notes:**

1. **The above information is for estimating purposes only. Do not use for construction.**
2. **Analysis is based upon Brom's method of foundation design.**
3. **All of the designs are based upon the following soil parameters:**
   - **a. Soil is homogeneous, non-cohesive**
   - **b. $\phi$ = 30 degrees**
   - **c. $\gamma$ = 110 pcf.**
   - **d. Water table is below bottom of foundation.**
   - **e. Site grade is 7H:1V or flatter.**
4. **Concrete 28 day compressive strength = 3000 psi.**
5. **Reinforcing meets the requirements of ASTM A615 grade 60.**
6. **Concrete design is in accordance with ACI 318-95.**
7. **Concrete is cast against undisturbed soil.**
8. **All reinforcing must be covered by a minimum of 3" of concrete on all sides.**
9. **All vertical reinforcing bars are equally spaced.**
10. **#4 reinforcing bars are used as hoops and are spaced on 12" centers.**

NOT FOR CONSTRUCTION.
FOR ESTIMATION ONLY.

*The information above is provided for preliminary estimating use only and may not be used as final or construction designs.*

# Round Non-Tapered Aluminum Poles (Anchor Base)

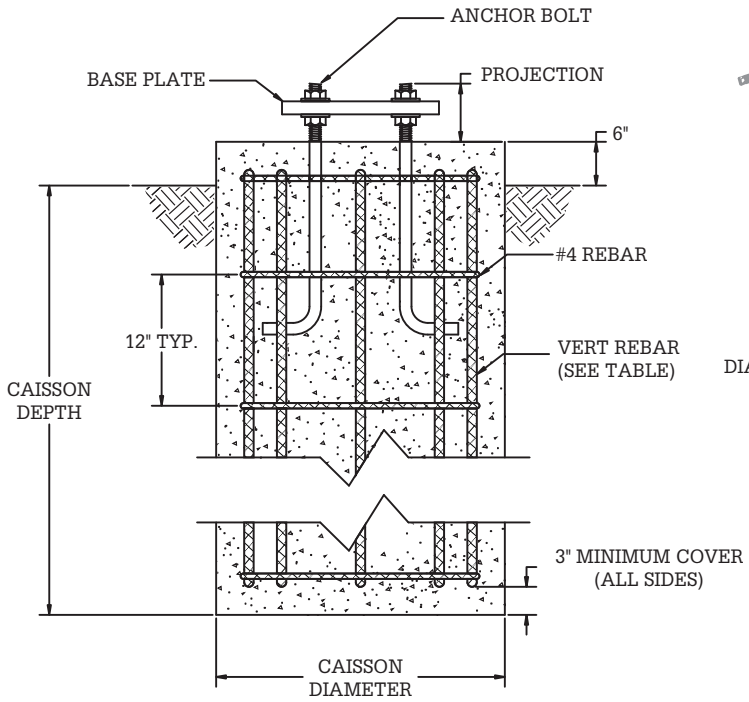


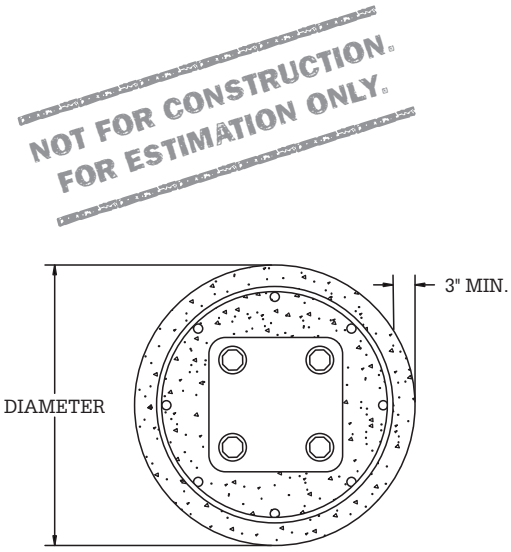


1. SEE TABLE FOR ACTUAL BOLT QUANTITY, BOLTS AND REBAR QUANTITIES SHOWN ARE FOR ILLUSTRATION PURPOSES ONLY.

*The information above is provided for preliminary estimating use only and may not be used as final or construction designs.*

MAVERICK®
POLES AND STRUCTURE, LLC.

# Square Non-Tapered Aluminum Poles

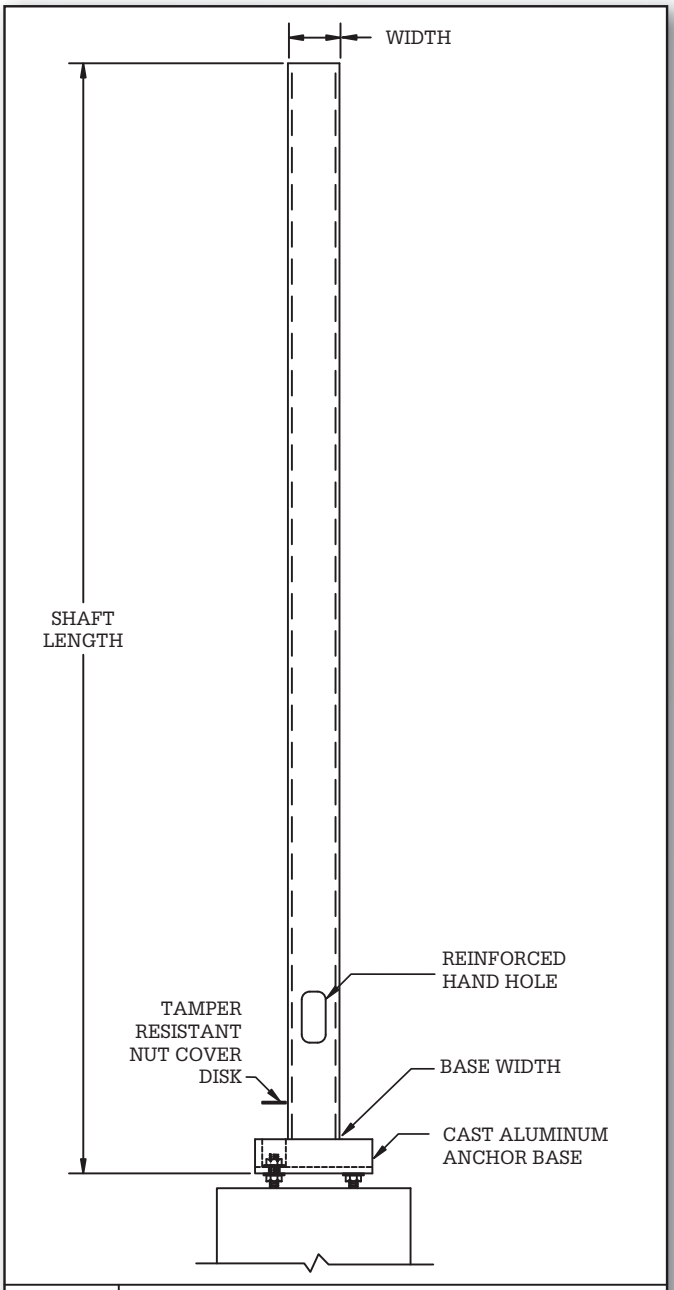


DETAIL | **POLE ASSEMBLY**

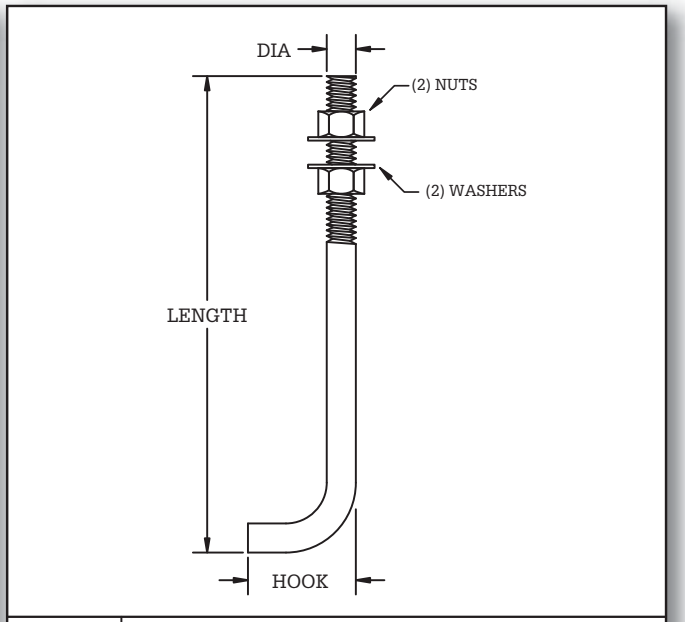


DETAIL 1 | **ANCHOR BOLT**

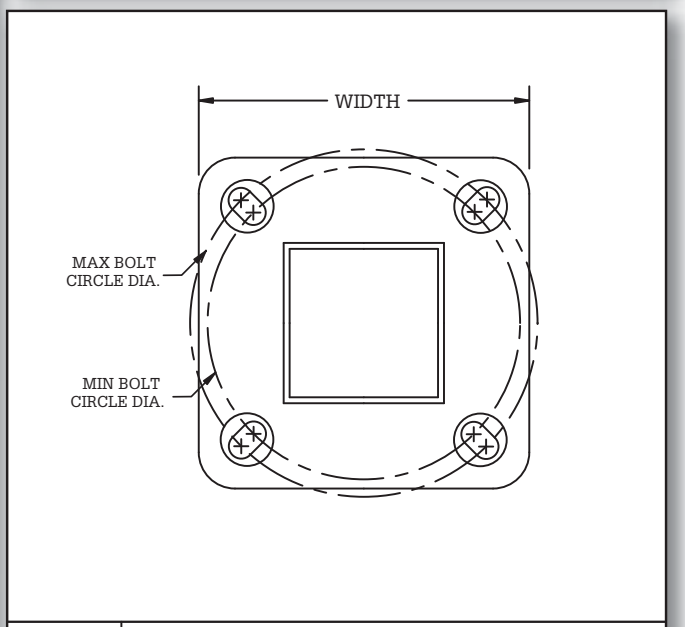


DETAIL 2 | **BASEPLATE**

MAVERICK®
POLES AND STRUCTURE, LLC.

# Square Non-Tapered Aluminum Poles

## STRUCTURE DATA

| Catalog Number | Gross Weight (Lbs) | Pole Shaft Data | | | | Base Plate Data | | Anchor Bolt Data |
|---|---|---|---|---|---|---|---|---|
| | | Base O.D. (in) | Top O.D. (in) | Wall Thk. (in) | Shaft Length (ft) | Bolt Circle Range (in) | Plate Width (in) | Dia x Lgth x Hk |
| SNAP-08-04-A8-AB | 34 | 4.0 | 4.0 | 0.125 | 8.00 | 8.5 to 9.625 | 9.94 | 0.75 x 17 x 3 |
| SNAP-10-04-A8-AB | 39 | 4.0 | 4.0 | 0.125 | 10.00 | 8.5 to 9.625 | 9.94 | 0.75 x 17 x 3 |
| SNAP-12-04-A8-AB | 43 | 4.0 | 4.0 | 0.125 | 12.00 | 8.5 to 9.625 | 9.94 | 0.75 x 17 x 3 |
| SNAP-14-04-A8-AB | 43 | 4.0 | 4.0 | 0.125 | 14.00 | 8.5 to 9.625 | 9.94 | 0.75 x 17 x 3 |
| SNAP-15-04-A8-AB | 50 | 4.0 | 4.0 | 0.125 | 15.00 | 8.5 to 9.625 | 9.94 | 0.75 x 17 x 3 |
| SNAP-16-04-A8-AB | 52 | 4.0 | 4.0 | 0.125 | 16.00 | 8.5 to 9.625 | 9.94 | 0.75 x 17 x 3 |
| SNAP-16-04-V8-AB | 61 | 4.0 | 4.0 | 0.188 | 16.00 | 8.5 to 9.625 | 9.94 | 0.75 x 17 x 3 |
| SNAP-18-04-A8-AB | 57 | 4.0 | 4.0 | 0.125 | 18.00 | 8.5 to 9.625 | 9.94 | 0.75 x 17 x 3 |
| SNAP-18-04-V8-AB | 68 | 4.0 | 4.0 | 0.188 | 18.00 | 8.5 to 9.625 | 9.94 | 0.75 x 17 x 3 |
| SNAP-18-05-V8-AB | 87 | 5.0 | 5.0 | 0.188 | 18.00 | 10.5 to 11.5 | 11.56 | 0.75 x 17 x 3 |
| SNAP-20-04-A8-AB | 62 | 4.0 | 4.0 | 0.125 | 20.00 | 8.5 to 9.625 | 9.94 | 0.75 x 17 x 3 |
| SNAP-20-04-V8-AB | 75 | 4.0 | 4.0 | 0.188 | 20.00 | 8.5 to 9.625 | 9.94 | 0.75 x 17 x 3 |
| SNAP-20-05-V8-AB | 96 | 5.0 | 5.0 | 0.188 | 20.00 | 10.5 to 11.5 | 11.56 | 0.75 x 17 x 3 |
| SNAP-20-06-V8-AB | 151 | 6.0 | 6.0 | 0.188 | 20.00 | 12 to 13 | 12.75 | 1 x 36 x 4 |
| SNAP-20-06-H8-AB | 184 | 6.0 | 6.0 | 0.250 | 20.00 | 12 to 13 | 12.75 | 1 x 36 x 4 |
| SNAP-25-05-V8-AB | 118 | 5.0 | 5.0 | 0.188 | 25.00 | 10.5 to 11.5 | 11.56 | 0.75 x 17 x 3 |
| SNAP-25-06-V8-AB | 177 | 6.0 | 6.0 | 0.188 | 25.00 | 12 to 13 | 12.75 | 1 x 36 x 4 |
| SNAP-25-06-H8-AB | 219 | 6.0 | 6.0 | 0.250 | 25.00 | 12 to 13 | 12.75 | 1 x 36 x 4 |
| SNAP-30-06-H8-AB | 253 | 6.0 | 6.0 | 0.250 | 30.00 | 12 to 13 | 12.75 | 1 x 36 x 4 |
| SNAP-30-07-H8-AB | 234 | 6.8 | 6.8 | 0.250 | 30.00 | 14 to 15 | 14.50 | 1 x 36 x 4 |
| SNAP-32-06-H8-AB+ | 274 | 6.0 | 6.0 | 0.250 | 32.00 | 12 to 13 | 12.75 | 1 x 36 x 4 |
| SNAP-35-06-H8-AB+ | 295 | 6.0 | 6.0 | 0.250 | 32.00 | 12 to 13 | 12.75 | 1 x 36 x 4 |
| SNAP-35-07-H8-AB+ | 273 | 6.8 | 6.8 | 0.250 | 35.00 | 14 to 15 | 14.50 | 1 x 36 x 4 |

* Includes factory-installed vibration damper.

MAVERICK®
POLES AND STRUCTURE, LLC.

# *Square Non-Tapered Aluminum Poles*

## STRUCTURE LOADING CAPACITIES

| Catalog Number | Maximum Loading | | | | | | | | | |
|---|---|---|---|---|---|---|---|---|---|---|
| | 70 mph | | 80 mph | | 90 mph | | 100 mph | | 110 mph | |
| | EPA ($ft^2$) | Wt. (lbs) | EPA ($ft^2$) | Wt. (lbs) | EPA ($ft^2$) | Wt. (lbs) | EPA ($ft^2$) | Wt. (lbs) | EPA ($ft^2$) | Wt. (lbs) |
| SNAP-08-04-A8-AB | 25.0 | 625 | 18.6 | 465 | 14.0 | 350 | 10.7 | 89 | 8.3 | 69 |
| SNAP-10-04-A8-AB | 19.0 | 475 | 13.7 | 343 | 10.0 | 250 | 7.3 | 61 | 5.3 | 44 |
| SNAP-12-04-A8-AB | 24.0 | 600 | 17.5 | 438 | 13.2 | 330 | 10.0 | 83 | 7.6 | 63 |
| SNAP-14-04-A8-AB | 18.7 | 468 | 13.3 | 333 | 9.6 | 240 | 6.9 | 58 | 4.9 | 41 |
| SNAP-15-04-A8-AB | 12.8 | 320 | 8.8 | 220 | 6.1 | 153 | 4.2 | 105 | 2.7 | 23 |
| SNAP-16-04-A8-AB | 11.0 | 275 | 7.3 | 183 | 4.8 | 120 | 3.0 | 75 | 1.7 | 14 |
| SNAP-16-04-V8-AB | 18.2 | 455 | 13.0 | 325 | 9.2 | 230 | 6.6 | 165 | 4.7 | 39 |
| SNAP-18-04-A8-AB | 8.3 | 208 | 5.1 | 128 | 2.9 | 73 | 1.3 | 33 | --- | --- |
| SNAP-18-04-V8-AB | 14.3 | 358 | 9.7 | 243 | 6.5 | 163 | 4.2 | 105 | 2.6 | 22 |
| SNAP-18-05-V8-AB | 25.6 | 640 | 18.2 | 455 | 13.0 | 325 | 9.2 | 230 | 6.4 | 53 |
| SNAP-20-04-A8-AB | 5.4 | 135 | 2.6 | 65 | 0.8 | 20 | --- | --- | --- | --- |
| SNAP-20-04-V8-AB | 11.0 | 275 | 6.9 | 173 | 4.1 | 103 | 2.1 | 53 | --- | --- |
| SNAP-20-05-V8-AB | 21.0 | 525 | 14.3 | 358 | 9.7 | 243 | 6.3 | 158 | 3.8 | 32 |
| SNAP-20-06-V8-AB | 30.0 | 750 | 23.0 | 575 | 16.0 | 400 | 10.9 | 273 | 7.1 | 59 |
| SNAP-20-06-H8-AB | 30.0 | 750 | 30.0 | 750 | 23.2 | 580 | 17.0 | 425 | 12.0 | 100 |
| SNAP-25-05-V8-AB | 11.6 | 290 | 6.5 | 163 | 2.8 | 70 | --- | --- | --- | --- |
| SNAP-25-06-V8-AB | 21.5 | 538 | 13.4 | 335 | 7.6 | 190 | 3.7 | 93 | 0.8 | 7 |
| SNAP-25-06-H8-AB | 28.5 | 713 | 18.5 | 463 | 11.6 | 290 | 6.7 | 168 | 3.0 | 25 |
| SNAP-30-06-H8-AB | 18.7 | 468 | 10.8 | 270 | 5.4 | 135 | 1.5 | 38 | --- | --- |
| SNAP-30-07-H8-AB | 30.0 | 750 | 19.0 | 475 | 11.5 | 288 | 6.2 | 155 | 2.5 | 21 |
| SNAP-32-06-H8-AB+ | 15.0 | 375 | 7.6 | 190 | 2.6 | 65 | --- | --- | --- | --- |
| SNAP-35-06-H8-AB+ | 11.9 | 298 | 4.9 | 123 | --- | --- | --- | --- | --- | --- |
| SNAP-35-07-H8-AB+ | 17.5 | 438 | 8.6 | 215 | 2.5 | 63 | --- | --- | --- | --- |

* Indicates models with a factory-installed vibration damper.

MAVERICK®
POLES AND STRUCTURE, LLC.

# Square Non-Tapered Aluminum Poles (8'-18')

## FOUNDATIONS (SNAP-AB)

| Catalog Number | Foundation Data | | | | | | Anchor Bolt Data | |
|---|---|---|---|---|---|---|---|---|
| | Caisson Diameter (in) | Caisson Depth (ft) | Vert Rebar Qty | Vert Rebar Size | Concrete Volume (Cu Yds) | Steel Weight (lbs) | Dia x Lgth x Hk | Bolt Circle Range (in) |
| SNAP-08-04-A8-AB | 24 | 5.00 | 8 | #5 | 0.58 | 59 | 0.75 x 17 x 3 | 8.5 to 9.625 |
| SNAP-10-04-A8-AB | 24 | 5.00 | 8 | #5 | 0.58 | 59 | 0.75 x 17 x 3 | 8.5 to 9.625 |
| SNAP-12-04-A8-AB | 24 | 5.00 | 8 | #5 | 0.58 | 59 | 0.75 x 17 x 3 | 8.5 to 9.625 |
| SNAP-14-04-A8-AB | 24 | 5.00 | 8 | #5 | 0.58 | 59 | 0.75 x 17 x 3 | 8.5 to 9.625 |
| SNAP-15-04-A8-AB | 24 | 5.00 | 8 | #5 | 0.58 | 59 | 0.75 x 17 x 3 | 8.5 to 9.625 |
| SNAP-16-04-A8-AB | 24 | 5.00 | 8 | #5 | 0.58 | 59 | 0.75 x 17 x 3 | 8.5 to 9.625 |
| SNAP-16-04-V8-AB | 24 | 5.00 | 8 | #5 | 0.58 | 59 | 0.75 x 17 x 3 | 8.5 to 9.625 |
| SNAP-18-04-A8-AB | 24 | 5.00 | 8 | #5 | 0.58 | 59 | 0.75 x 17 x 3 | 8.5 to 9.625 |
| SNAP-18-04-V8-AB | 24 | 5.00 | 8 | #5 | 0.58 | 59 | 0.75 x 17 x 3 | 8.5 to 9.625 |
| SNAP-18-05-V8-AB | 24 | 5.00 | 8 | #5 | 0.58 | 59 | 0.75 x 17 x 3 | 10.5 to 11.5 |

Notes:
1. The above information is for estimating purposes only. Do not use for construction.
2. Analysis is based upon Brom's method of foundation design.
3. All of the designs are based upon the following soil parameters:
   a. Soil is homogeneous, non-cohesive
   b. $\phi$ = 30 degrees
   c. $\gamma$ = 110 pcf.
   d. Water table is below bottom of foundation.
   e. Site grade is 7H:1V or flatter.
4. Concrete 28 day compressive strength = 3000 psi.
5. Reinforcing meets the requirements of ASTM A615 grade 60.
6. Concrete design is in accordance with ACI 318-95.
7. Concrete is cast against undisturbed soil.
8. All reinforcing must be covered by a minimum of 3" of concrete on all sides.
9. All vertical reinforcing bars are equally spaced.
10. #4 reinforcing bars are used as hoops and are spaced on 12" centers.

NOT FOR CONSTRUCTION.
FOR ESTIMATION ONLY.

*The information above is provided for preliminary estimating use only and may not be used as final or construction designs.*

MAVERICK®
POLES AND STRUCTURE, LLC.

# Square Non-Tapered Aluminum Poles (20'-35')

## FOUNDATIONS (SNAP-AB)

| Catalog Number | Foundation Data | | | | | | Anchor Bolt Data | |
|---|---|---|---|---|---|---|---|---|
| | Caisson Diameter (in) | Caisson Depth (ft) | Vert Rebar Qty | Vert Rebar Size | Concrete Volume (Cu Yds) | Steel Weight (lbs) | Dia x Lgth x Hk | Bolt Circle Range (in) |
| SNAP-20-04-A8-AB | 24 | 5.00 | 8 | #5 | 0.58 | 59 | 0.75 x 17 x 3 | 8.5 to 9.625 |
| SNAP-20-04-V8-AB | 24 | 5.00 | 8 | #5 | 0.58 | 59 | 0.75 x 17 x 3 | 8.5 to 9.625 |
| SNAP-20-05-V8-AB | 24 | 5.00 | 8 | #5 | 0.58 | 59 | 0.75 x 17 x 3 | 10.5 to 11.5 |
| SNAP-20-06-V8-AB | 24 | 5.00 | 8 | #5 | 0.58 | 59 | 1 x 36 x 4 | 12 to 13 |
| SNAP-20-06-H8-AB | 24 | 5.00 | 8 | #5 | 0.58 | 59 | 1 x 36 x 4 | 12 to 13 |
| SNAP-25-05-V8-AB | 24 | 5.00 | 8 | #5 | 0.58 | 59 | 0.75 x 17 x 3 | 10.5 to 11.5 |
| SNAP-25-06-V8-AB | 24 | 5.00 | 8 | #5 | 0.58 | 59 | 1 x 36 x 4 | 12 to 13 |
| SNAP-25-06-H8-AB | 24 | 5.00 | 8 | #5 | 0.58 | 59 | 1 x 36 x 4 | 12 to 13 |
| SNAP-30-06-H8-AB | 24 | 6.00 | 8 | #6 | 0.70 | 71 | 1 x 36 x 4 | 12 to 13 |
| SNAP-30-07-H8-AB | 24 | 6.00 | 8 | #6 | 0.70 | 71 | 1 x 36 x 4 | 14 to 15 |
| SNAP-32-06-H8-AB+ | 24 | 6.00 | 8 | #6 | 0.70 | 71 | 1 x 36 x 4 | 12 to 13 |
| SNAP-35-06-H8-AB+ | 24 | 6.00 | 8 | #6 | 0.70 | 71 | 1 x 36 x 4 | 12 to 13 |
| SNAP-35-07-H8-AB+ | 24 | 6.00 | 8 | #6 | 0.70 | 71 | 1 x 36 x 4 | 14 to 15 |

**Notes:**

1. **The above information is for estimating purposes only. Do not use for construction.**
2. **Analysis is based upon Brom's method of foundation design.**
3. **All of the designs are based upon the following soil parameters:**
   - **a. Soil is homogeneous, non-cohesive**
   - **b. $\phi$ = 30 degrees**
   - **c. $\gamma$ = 110 pcf.**
   - **d. Water table is below bottom of foundation.**
   - **e. Site grade is 7H:1V or flatter.**
4. **Concrete 28 day compressive strength = 3000 psi.**
5. **Reinforcing meets the requirements of ASTM A615 grade 60.**
6. **Concrete design is in accordance with ACI 318-95.**
7. **Concrete is cast against undisturbed soil.**
8. **All reinforcing must be covered by a minimum of 3" of concrete on all sides.**
9. **All vertical reinforcing bars are equally spaced.**
10. **#4 reinforcing bars are used as hoops and are spaced on 12" centers.**

NOT FOR CONSTRUCTION.
FOR ESTIMATION ONLY.

*The information above is provided for preliminary estimating use only and may not be used as final or construction designs.*

MAVERICK®
POLES AND STRUCTURE, LLC.

# Square Non-Tapered Aluminum Poles

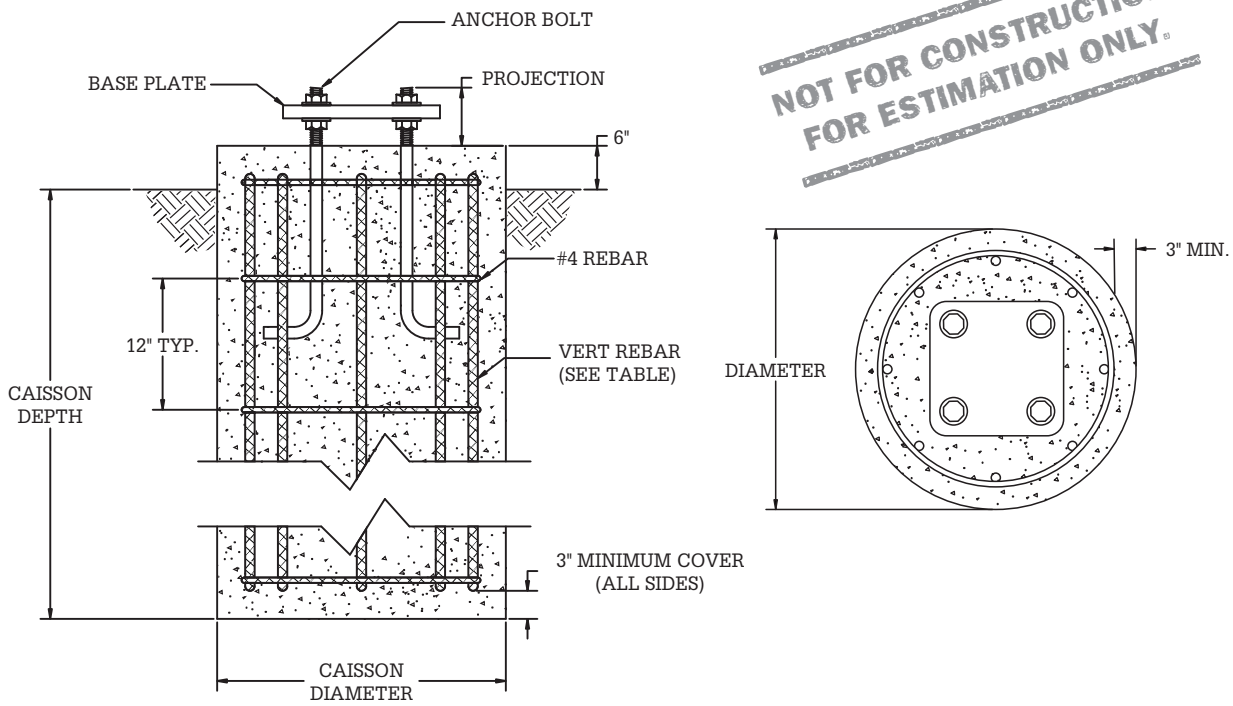


*The information above is provided for preliminary estimating use only and may not be used as final or construction designs.*

MAVERICK®
POLES AND STRUCTURE, LLC.

# Round Tapered Hinged Aluminum Poles

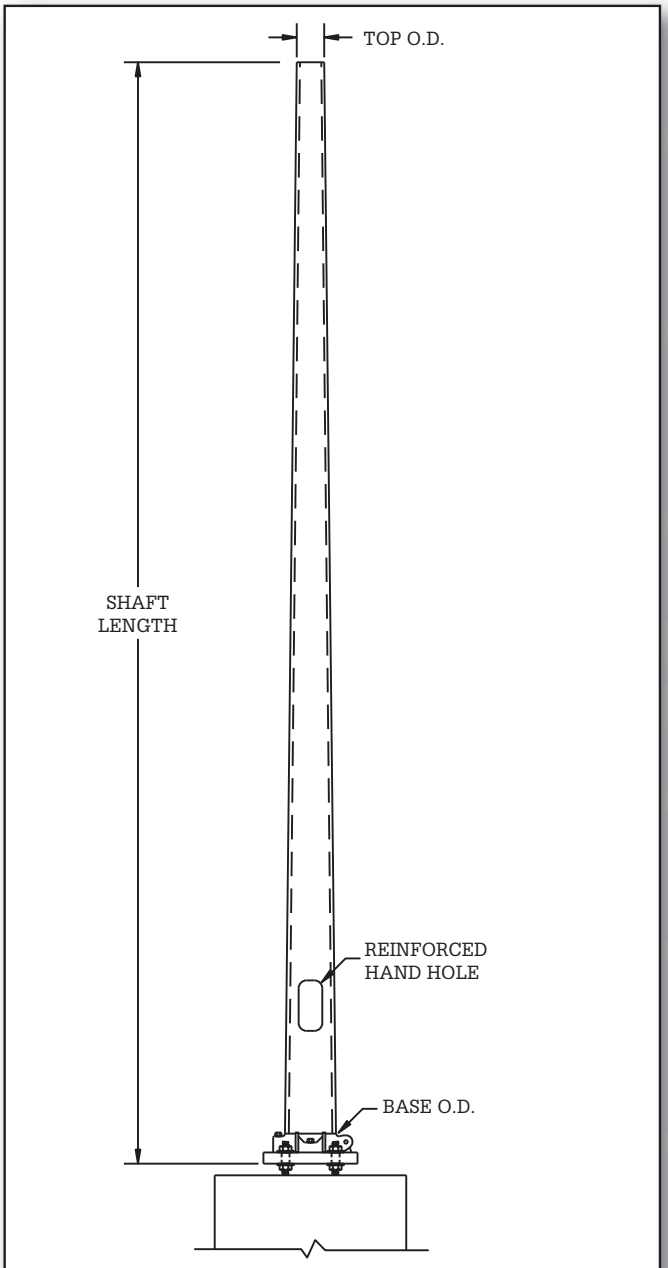


DETAIL | **POLE ASSEMBLY**

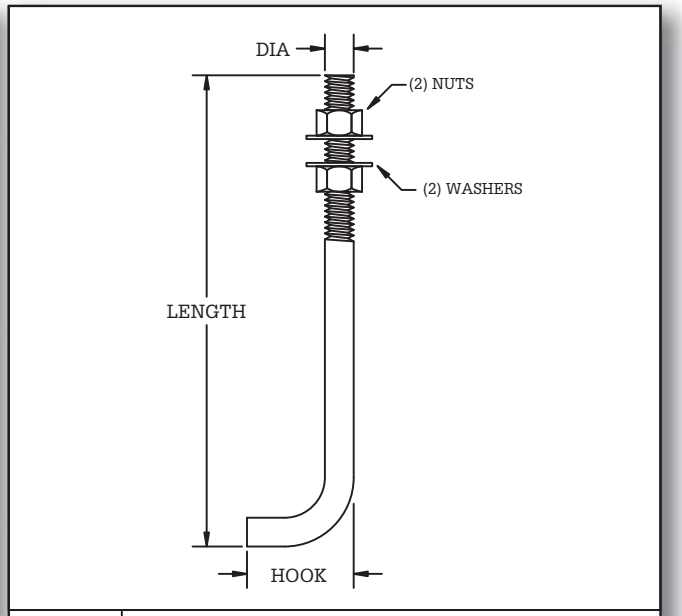


DETAIL 1 | **ANCHOR BOLT**

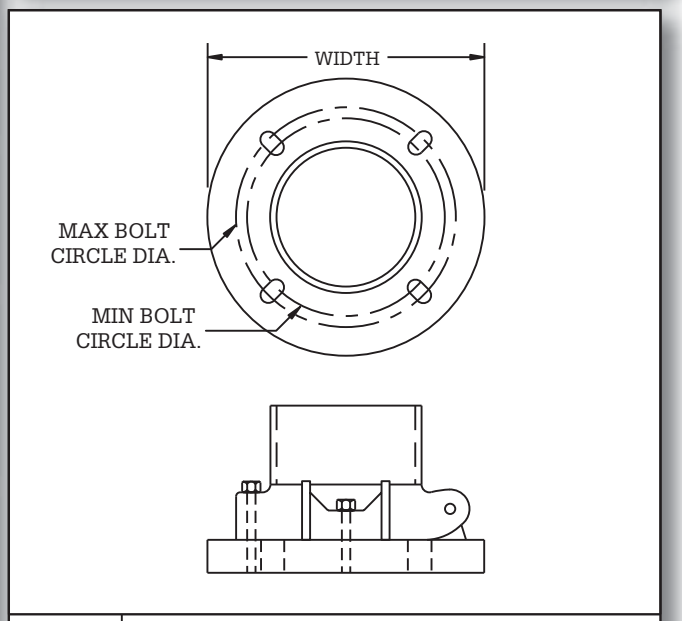


DETAIL 2 | **BASEPLATE**

MAVERICK®
POLES AND STRUCTURE, LLC.

# Round Tapered Hinged Aluminum Poles

## STRUCTURE DATA

| Catalog Number | Gross Weight (Lbs) | Pole Shaft Data | | | | Base Plate Data | | Anchor Bolt Data |
|---|---|---|---|---|---|---|---|---|
| | | Base O.D. (in) | Top O.D. (in) | Wall Thk. (in) | Shaft Length (ft) | Bolt Circle Range (in) | Plate Width (in) | Dia x Lgth x Hk |
| RTAH-08-04-A9-AB | 38 | 4.0 | 3.0 | 0.125 | 7.67 | 8.5 to 10 | 12.63 | 0.75 x 17 x 3 |
| RTAH-10-04-A9-AB | 42 | 4.0 | 3.0 | 0.125 | 9.67 | 8.5 to 10 | 12.63 | 0.75 x 17 x 3 |
| RTAH-10-05-A9-AB | 45 | 5.0 | 3.0 | 0.125 | 9.67 | 8.5 to 10 | 12.63 | 0.75 x 17 x 3 |
| RTAH-12-04-A9-AB | 46 | 4.0 | 3.0 | 0.125 | 11.67 | 8.5 to 10 | 12.63 | 0.75 x 17 x 3 |
| RTAH-12-05-A9-AB | 50 | 5.0 | 3.0 | 0.125 | 11.67 | 8.5 to 10 | 12.63 | 0.75 x 17 x 3 |
| RTAH-12-05-B9-AB | 56 | 5.0 | 3.0 | 0.156 | 11.67 | 8.5 to 10 | 12.63 | 0.75 x 17 x 3 |
| RTAH-12-05-V9-AB | 63 | 5.0 | 3.0 | 0.188 | 11.67 | 8.5 to 10 | 12.63 | 0.75 x 17 x 3 |
| RTAH-14-04-A9-AB | 49 | 4.0 | 3.0 | 0.125 | 13.67 | 8.5 to 10 | 12.63 | 0.75 x 17 x 3 |
| RTAH-14-05-A9-AB | 54 | 5.0 | 3.0 | 0.125 | 13.67 | 8.5 to 10 | 12.63 | 0.75 x 17 x 3 |
| RTAH-14-05-B9-AB | 62 | 5.0 | 3.0 | 0.156 | 13.67 | 8.5 to 10 | 12.63 | 0.75 x 17 x 3 |
| RTAH-14-05-V9-AB | 69 | 5.0 | 3.0 | 0.188 | 13.67 | 8.5 to 10 | 12.63 | 0.75 x 17 x 3 |
| RTAH-16-04-A9-AB | 53 | 4.0 | 3.0 | 0.125 | 15.67 | 8.5 to 10 | 12.63 | 0.75 x 17 x 3 |
| RTAH-16-05-A9-AB | 57 | 5.0 | 3.0 | 0.125 | 15.67 | 8.5 to 10 | 12.63 | 0.75 x 17 x 3 |
| RTAH-16-05-B9-AB | 67 | 5.0 | 3.0 | 0.156 | 15.67 | 8.5 to 10 | 12.63 | 0.75 x 17 x 3 |
| RTAH-16-05-V9-AB | 76 | 5.0 | 3.0 | 0.188 | 15.67 | 8.5 to 10 | 12.63 | 0.75 x 17 x 3 |
| RTAH-16-06-B9-AB | 66 | 6.0 | 4.0 | 0.156 | 15.67 | 8.5 to 10 | 12.63 | 0.75 x 17 x 3 |
| RTAH-16-06-V9-AB | 76 | 6.0 | 4.0 | 0.188 | 15.67 | 8.5 to 10 | 12.63 | 0.75 x 17 x 3 |
| RTAH-18-05-A9-AB | 61 | 5.0 | 3.0 | 0.125 | 17.67 | 8.5 to 10 | 12.63 | 0.75 x 17 x 3 |
| RTAH-18-05-B9-AB | 71 | 5.0 | 3.0 | 0.156 | 17.67 | 8.5 to 10 | 12.63 | 0.75 x 17 x 3 |
| RTAH-18-05-V9-AB | 81 | 5.0 | 3.0 | 0.188 | 17.67 | 8.5 to 10 | 12.63 | 0.75 x 17 x 3 |
| RTAH-18-06-B9-AB | 73 | 6.0 | 4.0 | 0.156 | 17.67 | 8.5 to 10 | 12.63 | 0.75 x 17 x 3 |
| RTAH-18-06-V9-AB | 84 | 6.0 | 4.0 | 0.188 | 17.67 | 8.5 to 10 | 12.63 | 0.75 x 17 x 3 |
| RTAH-20-05-A9-AB | 64 | 5.0 | 3.0 | 0.125 | 19.67 | 8.5 to 10 | 12.63 | 0.75 x 17 x 3 |
| RTAH-20-05-B9-AB | 77 | 5.0 | 3.0 | 0.156 | 19.67 | 8.5 to 10 | 12.63 | 0.75 x 17 x 3 |
| RTAH-20-05-V9-AB | 87 | 5.0 | 3.0 | 0.188 | 19.67 | 8.5 to 10 | 12.63 | 0.75 x 17 x 3 |
| RTAH-20-06-B9-AB | 75 | 6.0 | 4.0 | 0.156 | 19.67 | 8.5 to 10 | 12.63 | 0.75 x 17 x 3 |
| RTAH-20-06-V9-AB | 88 | 6.0 | 4.0 | 0.188 | 19.67 | 8.5 to 10 | 12.63 | 0.75 x 17 x 3 |

MAVERICK®
POLES AND STRUCTURE, LLC.

# Round Tapered Hinged Aluminum Poles

## STRUCTURE LOADING CAPACITIES

| Catalog Number | Maximum Loading | | | | | | | | | |
|---|---|---|---|---|---|---|---|---|---|---|
| | 70 mph | | 80 mph | | 90 mph | | 100 mph | | 110 mph | |
| | EPA ($ft^2$) | Wt. (lbs) | EPA ($ft^2$) | Wt. (lbs) | EPA ($ft^2$) | Wt. (lbs) | EPA ($ft^2$) | Wt. (lbs) | EPA ($ft^2$) | Wt. (lbs) |
| RTAH-08-04-A9-AB | 16.1 | 403 | 12.1 | 303 | 9.3 | 233 | 7.3 | 183 | 5.9 | 148 |
| RTAH-10-04-A9-AB | 12.0 | 300 | 8.9 | 223 | 6.7 | 168 | 5.2 | 130 | 4.1 | 103 |
| RTAH-10-05-A9-AB | 19.7 | 493 | 14.7 | 368 | 11.4 | 285 | 9.0 | 225 | 7.3 | 183 |
| RTAH-12-04-A9-AB | 9.1 | 228 | 6.6 | 165 | 4.9 | 123 | 3.6 | 90 | 2.8 | 70 |
| RTAH-12-05-A9-AB | 15.5 | 388 | 11.5 | 288 | 8.7 | 218 | 6.8 | 170 | 5.4 | 135 |
| RTAH-12-05-B9-AB | 19.4 | 485 | 14.5 | 363 | 11.1 | 278 | 8.7 | 218 | 7.0 | 175 |
| RTAH-12-05-V9-AB | 23.4 | 585 | 17.5 | 438 | 13.5 | 338 | 10.6 | 265 | 8.6 | 215 |
| RTAH-14-04-A9-AB | 7.0 | 175 | 4.9 | 123 | 3.5 | 88 | 2.5 | 63 | 1.8 | 45 |
| RTAH-14-05-A9-AB | 12.3 | 308 | 9.0 | 225 | 6.7 | 168 | 5.1 | 128 | 4.0 | 100 |
| RTAH-14-05-B9-AB | 15.6 | 390 | 11.5 | 288 | 8.7 | 218 | 6.7 | 168 | 5.3 | 133 |
| RTAH-14-05-V9-AB | 18.9 | 473 | 14.0 | 350 | 10.7 | 268 | 8.4 | 210 | 6.7 | 168 |
| RTAH-16-04-A9-AB | 5.4 | 135 | 3.6 | 90 | 2.4 | 60 | 1.5 | 38 | 1.0 | 25 |
| RTAH-16-05-A9-AB | 9.9 | 248 | 7.0 | 175 | 5.1 | 128 | 3.8 | 95 | 2.9 | 73 |
| RTAH-16-05-B9-AB | 12.6 | 315 | 9.1 | 228 | 6.8 | 170 | 5.2 | 130 | 4.0 | 100 |
| RTAH-16-05-V9-AB | 15.4 | 385 | 11.2 | 280 | 8.5 | 213 | 6.5 | 163 | 5.2 | 130 |
| RTAH-16-06-B9-AB | 19.2 | 480 | 14.2 | 355 | 11.0 | 275 | 8.7 | 218 | 7.0 | 175 |
| RTAH-16-06-V9-AB | 23.4 | 585 | 17.5 | 438 | 13.5 | 338 | 10.8 | 270 | 8.8 | 220 |
| RTAH-18-05-A9-AB | 7.9 | 198 | 5.4 | 135 | 3.8 | 95 | 2.7 | 68 | 2.0 | 50 |
| RTAH-18-05-B9-AB | 10.2 | 255 | 7.2 | 180 | 5.2 | 130 | 3.9 | 98 | 3.0 | 75 |
| RTAH-18-05-V9-AB | 12.7 | 318 | 9.1 | 228 | 6.7 | 168 | 5.1 | 128 | 4.0 | 100 |
| RTAH-18-06-B9-AB | 15.9 | 398 | 11.7 | 293 | 8.9 | 223 | 7.0 | 175 | 5.6 | 140 |
| RTAH-18-06-V9-AB | 19.6 | 490 | 14.5 | 363 | 11.1 | 278 | 8.8 | 220 | 7.1 | 178 |
| RTAH-20-05-A9-AB | 6.3 | 158 | 4.1 | 103 | 2.7 | 68 | 1.7 | 43 | 1.1 | 28 |
| RTAH-20-05-B9-AB | 8.5 | 213 | 5.8 | 145 | 4.0 | 100 | 2.8 | 70 | 2.0 | 50 |
| RTAH-20-05-V9-AB | 10.7 | 268 | 7.5 | 188 | 5.3 | 133 | 3.9 | 98 | 2.9 | 73 |
| RTAH-20-06-B9-AB | 13.3 | 333 | 9.5 | 238 | 7.1 | 178 | 5.5 | 138 | 4.4 | 110 |
| RTAH-20-06-V9-AB | 16.6 | 415 | 12.0 | 300 | 9.1 | 228 | 7.1 | 178 | 5.7 | 143 |

MAVERICK®
POLES AND STRUCTURE, LLC.

# Round Tapered Aluminum Hinged

## FOUNDATIONS (RTAH-AB)

| Catalog Number | Foundation Data | | | | | | Anchor Bolt Data | |
|---|---|---|---|---|---|---|---|---|
| | Caisson Diameter (in) | Caisson Depth (ft) | Vert Rebar Qty | Vert Rebar Size | Concrete Volume (Cu Yds) | Steel Weight (lbs) | Dia x Lgth x Hk | Bolt Circle Range (in) |
| RTAH-08-04-A9-AB | 24 | 5.00 | 8 | #5 | 0.58 | 59 | 0.75 x 17 x 3 | 8.5 to 10 |
| RTAH-10-04-A9-AB | 24 | 5.00 | 8 | #5 | 0.58 | 59 | 0.75 x 17 x 3 | 8.5 to 10 |
| RTAH-10-05-A9-AB | 24 | 5.00 | 8 | #5 | 0.58 | 59 | 0.75 x 17 x 3 | 8.5 to 10 |
| RTAH-12-04-A9-AB | 24 | 5.00 | 8 | #5 | 0.58 | 59 | 0.75 x 17 x 3 | 8.5 to 10 |
| RTAH-12-05-A9-AB | 24 | 5.00 | 8 | #5 | 0.58 | 59 | 0.75 x 17 x 3 | 8.5 to 10 |
| RTAH-12-05-B9-AB | 24 | 5.00 | 8 | #5 | 0.58 | 59 | 0.75 x 17 x 3 | 8.5 to 10 |
| RTAH-12-05-V9-AB | 24 | 5.00 | 8 | #5 | 0.58 | 59 | 0.75 x 17 x 3 | 8.5 to 10 |
| RTAH-14-04-A9-AB | 24 | 5.00 | 8 | #5 | 0.58 | 59 | 0.75 x 17 x 3 | 8.5 to 10 |
| RTAH-14-05-A9-AB | 24 | 5.00 | 8 | #5 | 0.58 | 59 | 0.75 x 17 x 3 | 8.5 to 10 |
| RTAH-14-05-B9-AB | 24 | 5.00 | 8 | #5 | 0.58 | 59 | 0.75 x 17 x 3 | 8.5 to 10 |
| RTAH-14-05-V9-AB | 24 | 5.00 | 8 | #5 | 0.58 | 59 | 0.75 x 17 x 3 | 8.5 to 10 |
| RTAH-16-04-A9-AB | 24 | 5.00 | 8 | #5 | 0.58 | 59 | 0.75 x 17 x 3 | 8.5 to 10 |
| RTAH-16-05-A9-AB | 24 | 5.00 | 8 | #5 | 0.58 | 59 | 0.75 x 17 x 3 | 8.5 to 10 |
| RTAH-16-05-B9-AB | 24 | 5.00 | 8 | #5 | 0.58 | 59 | 0.75 x 17 x 3 | 8.5 to 10 |
| RTAH-16-05-V9-AB | 24 | 5.00 | 8 | #5 | 0.58 | 59 | 0.75 x 17 x 3 | 8.5 to 10 |
| RTAH-16-06-B9-AB | 24 | 5.00 | 8 | #5 | 0.58 | 59 | 0.75 x 17 x 3 | 8.5 to 10 |
| RTAH-16-06-V9-AB | 24 | 5.00 | 8 | #5 | 0.58 | 59 | 0.75 x 17 x 3 | 8.5 to 10 |
| RTAH-18-05-A9-AB | 24 | 5.00 | 8 | #5 | 0.58 | 59 | 0.75 x 17 x 3 | 8.5 to 10 |
| RTAH-18-05-B9-AB | 24 | 5.00 | 8 | #5 | 0.58 | 59 | 0.75 x 17 x 3 | 8.5 to 10 |
| RTAH-18-05-V9-AB | 24 | 5.00 | 8 | #5 | 0.58 | 59 | 0.75 x 17 x 3 | 8.5 to 10 |
| RTAH-18-06-B9-AB | 24 | 5.00 | 8 | #5 | 0.58 | 59 | 0.75 x 17 x 3 | 8.5 to 10 |
| RTAH-18-06-V9-AB | 24 | 5.00 | 8 | #5 | 0.58 | 59 | 0.75 x 17 x 3 | 8.5 to 10 |
| RTAH-20-05-A9-AB | 24 | 5.00 | 8 | #5 | 0.58 | 59 | 0.75 x 17 x 3 | 8.5 to 10 |
| RTAH-20-05-B9-AB | 24 | 5.00 | 8 | #5 | 0.58 | 59 | 0.75 x 17 x 3 | 8.5 to 10 |
| RTAH-20-05-V9-AB | 24 | 5.00 | 8 | #5 | 0.58 | 59 | 0.75 x 17 x 3 | 8.5 to 10 |
| RTAH-20-06-B9-AB | 24 | 5.00 | 8 | #5 | 0.58 | 59 | 0.75 x 17 x 3 | 8.5 to 10 |
| RTAH-20-06-V9-AB | 24 | 5.00 | 8 | #5 | 0.58 | 59 | 0.75 x 17 x 3 | 8.5 to 10 |

**Notes:**

1. **The above information is for estimating purposes only. Do not use for construction.**
2. **Analysis is based upon Brom's method of foundation design.**
3. **All of the designs are based upon the following soil parameters:**
   - **a. Soil is homogeneous, non-cohesive**
   - **b. $\phi$ = 30 degrees**
   - **c. $\gamma$ = 110 pcf.**
   - **d. Water table is below bottom of foundation.**
   - **e. Site grade is 7H:1V or flatter.**
4. **Concrete 28 day compressive strength = 3000 psi.**
5. **Reinforcing meets the requirements of ASTM A615 grade 60.**
6. **Concrete design is in accordance with ACI 318-95.**
7. **Concrete is cast against undisturbed soil.**
8. **All reinforcing must be covered by a minimum of 3" of concrete on all sides.**
9. **All vertical reinforcing bars are equally spaced.**
10. **#4 reinforcing bars are used as hoops and are spaced on 12" centers.**

NOT FOR CONSTRUCTION.
FOR ESTIMATION ONLY.

*The information above is provided for preliminary estimating use only and may not be used as final or construction designs.*

MAVERICK®
POLES AND STRUCTURE, LLC.

# Round Tapered Aluminum Hinged (Anchor Base)

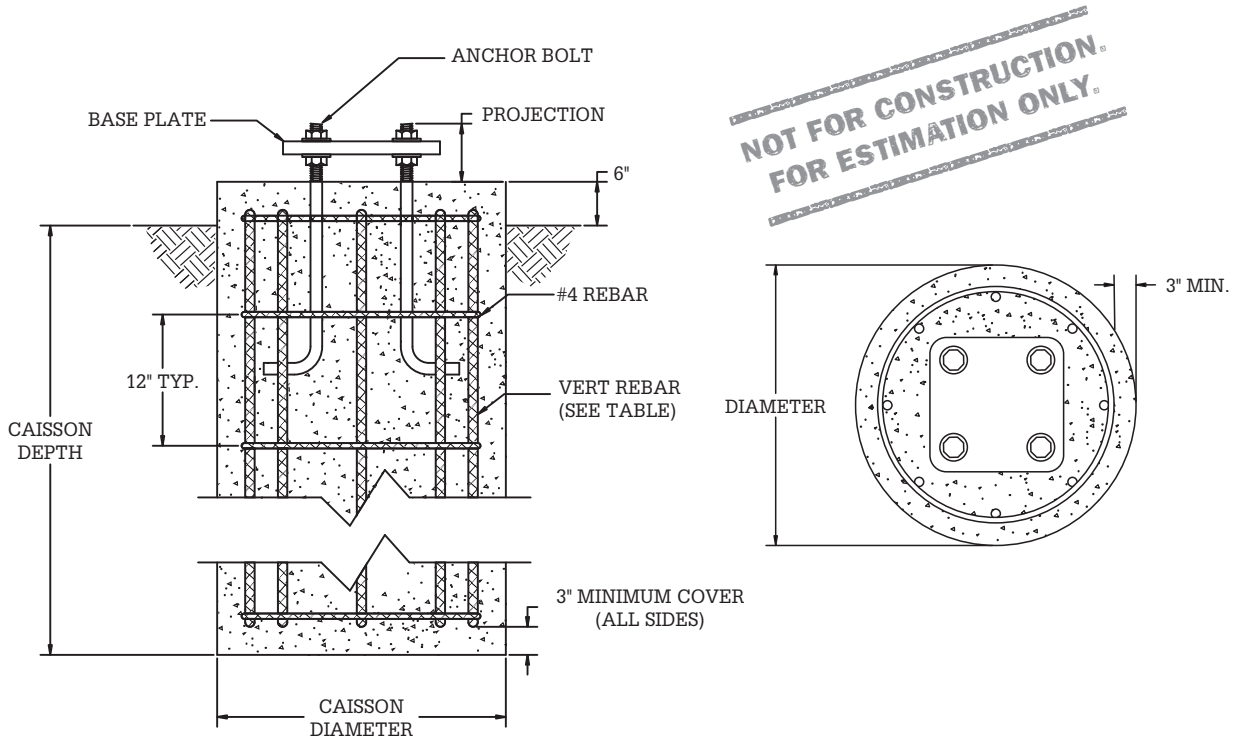


1. SEE TABLE FOR ACTUAL BOLT QUANTITY, BOLTS AND REBAR QUANTITIES SHOWN ARE FOR ILLUSTRATION PURPOSES ONLY.

*The information above is provided for preliminary estimating use only and may not be used as final or construction designs.*

MAVERICK®
POLES AND STRUCTURE, LLC.

# Round Non-Tapered Hinged Aluminum Poles

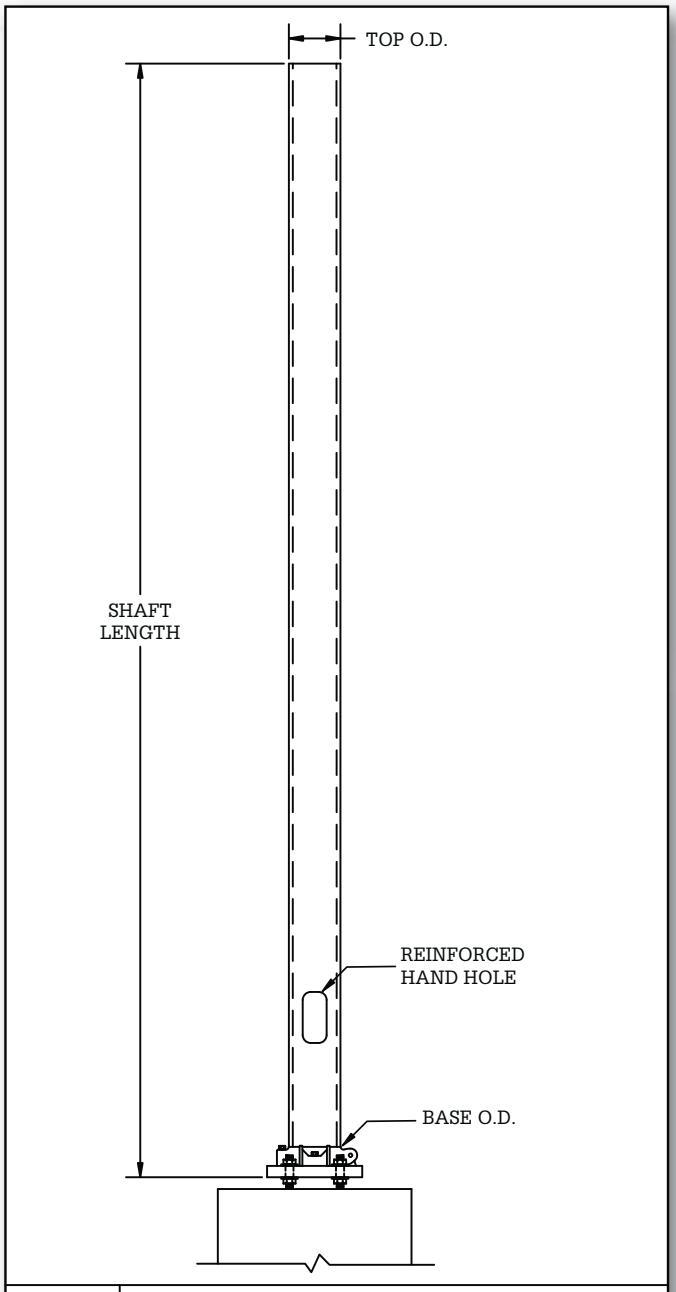


DETAIL | **POLE ASSEMBLY**

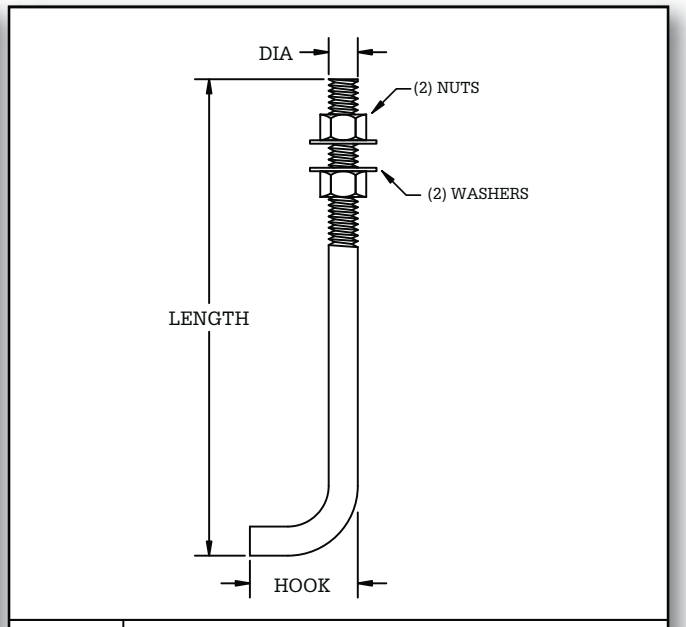


DETAIL 1 | **ANCHOR BOLT**

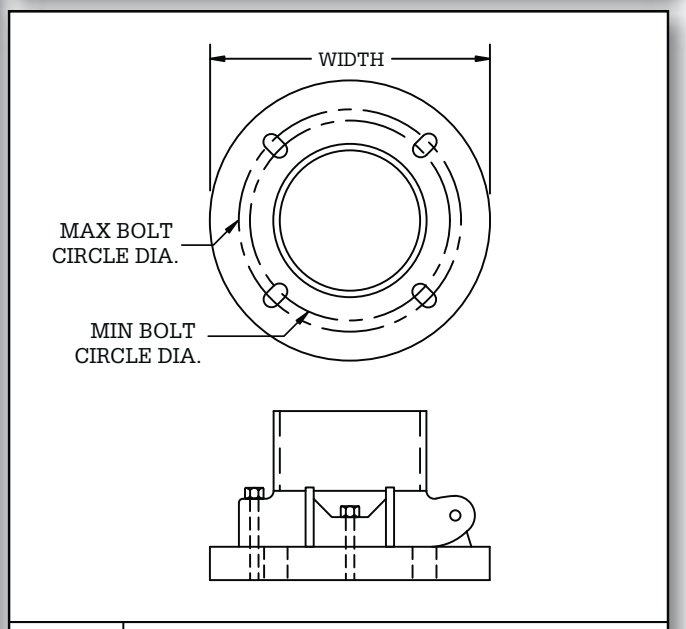


DETAIL 2 | **BASEPLATE**

MAVERICK®
POLES AND STRUCTURE, LLC.

# Round Non-Tapered Hinged Aluminum Poles

## STRUCTURE DATA

| Catalog Number | Gross Weight (Lbs) | Pole Shaft Data | | | | Base Plate Data | | Anchor Bolt Data |
|---|---|---|---|---|---|---|---|---|
| | | Base O.D. (in) | Top O.D. (in) | Wall Thk. (in) | Shaft Length (ft) | Bolt Circle Range (in) | Plate Width (in) | Dia x Lgth x Hk |
| RNAH-08-04-A9-AB | 40 | 4.0 | 4.0 | 0.125 | 8.00 | 8.5 to 10 | 12.63 | 0.75 x 17 x 3 |
| RNAH-10-04-A9-AB | 43 | 4.0 | 4.0 | 0.125 | 10.00 | 8.5 to 10 | 12.63 | 0.75 x 17 x 3 |
| RNAH-10-05-A9-AB | 47 | 5.0 | 5.0 | 0.125 | 10.00 | 8.5 to 10 | 12.63 | 0.75 x 17 x 3 |
| RNAH-12-04-A9-AB | 47 | 4.0 | 4.0 | 0.125 | 12.00 | 8.5 to 10 | 12.63 | 0.75 x 17 x 3 |
| RNAH-12-05-A9-AB | 52 | 5.0 | 5.0 | 0.125 | 12.00 | 8.5 to 10 | 12.63 | 0.75 x 17 x 3 |
| RNAH-12-05-B9-AB | 58 | 5.0 | 5.0 | 0.156 | 12.00 | 8.5 to 10 | 12.63 | 0.75 x 17 x 3 |
| RNAH-12-05-V9-AB | 65 | 5.0 | 5.0 | 0.188 | 12.00 | 8.5 to 10 | 12.63 | 0.75 x 17 x 3 |
| RNAH-14-04-A9-AB | 50 | 4.0 | 4.0 | 0.125 | 14.00 | 8.5 to 10 | 12.63 | 0.75 x 17 x 3 |
| RNAH-14-05-A9-AB | 56 | 5.0 | 5.0 | 0.125 | 14.00 | 8.5 to 10 | 12.63 | 0.75 x 17 x 3 |
| RNAH-14-05-B9-AB | 64 | 5.0 | 5.0 | 0.156 | 14.00 | 8.5 to 10 | 12.63 | 0.75 x 17 x 3 |
| RNAH-14-05-V9-AB | 72 | 5.0 | 5.0 | 0.188 | 14.00 | 8.5 to 10 | 12.63 | 0.75 x 17 x 3 |
| RNAH-16-04-A9-AB | 54 | 4.0 | 4.0 | 0.125 | 16.00 | 8.5 to 10 | 12.63 | 0.75 x 17 x 3 |
| RNAH-16-05-A9-AB | 61 | 5.0 | 5.0 | 0.125 | 16.00 | 8.5 to 10 | 12.63 | 0.75 x 17 x 3 |
| RNAH-16-05-B9-AB | 70 | 5.0 | 5.0 | 0.156 | 16.00 | 8.5 to 10 | 12.63 | 0.75 x 17 x 3 |
| RNAH-16-05-V9-AB | 78 | 5.0 | 5.0 | 0.188 | 16.00 | 8.5 to 10 | 12.63 | 0.75 x 17 x 3 |
| RNAH-16-06-B9-AB | 68 | 6.0 | 6.0 | 0.156 | 16.00 | 8.5 to 10 | 12.63 | 0.75 x 17 x 3 |
| RNAH-16-06-V9-AB | 80 | 6.0 | 6.0 | 0.188 | 16.00 | 8.5 to 10 | 12.63 | 0.75 x 17 x 3 |
| RNAH-18-05-A9-AB | 65 | 5.0 | 5.0 | 0.125 | 18.00 | 8.5 to 10 | 12.63 | 0.75 x 17 x 3 |
| RNAH-18-05-B9-AB | 75 | 5.0 | 5.0 | 0.156 | 18.00 | 8.5 to 10 | 12.63 | 0.75 x 17 x 3 |
| RNAH-18-05-V9-AB | 85 | 5.0 | 5.0 | 0.188 | 18.00 | 8.5 to 10 | 12.63 | 0.75 x 17 x 3 |
| RNAH-18-06-V9-AB | 88 | 6.0 | 6.0 | 0.188 | 18.00 | 8.5 to 10 | 12.63 | 0.75 x 17 x 3 |
| RNAH-20-05-A9-AB | 70 | 5.0 | 5.0 | 0.125 | 20.00 | 8.5 to 10 | 12.63 | 0.75 x 17 x 3 |
| RNAH-20-05-B9-AB | 81 | 5.0 | 5.0 | 0.156 | 20.00 | 8.5 to 10 | 12.63 | 0.75 x 17 x 3 |
| RNAH-20-05-V9-AB | 92 | 5.0 | 5.0 | 0.188 | 20.00 | 8.5 to 10 | 12.63 | 0.75 x 17 x 3 |
| RNAH-20-06-B9-AB | 82 | 6.0 | 6.0 | 0.156 | 20.00 | 8.5 to 10 | 12.63 | 0.75 x 17 x 3 |
| RNAH-20-06-V9-AB | 95 | 6.0 | 6.0 | 0.188 | 20.00 | 8.5 to 10 | 12.63 | 0.75 x 17 x 3 |

MAVERICK®
POLES AND STRUCTURE, LLC.

# Round Non-Tapered Hinged Aluminum Poles

## STRUCTURE LOADING CAPACITIES

| Catalog Number | Maximum Loading | | | | | | | | | |
|---|---|---|---|---|---|---|---|---|---|---|
| | 70 mph | | 80 mph | | 90 mph | | 100 mph | | 110 mph | |
| | EPA ($ft^2$) | Wt. (lbs) | EPA ($ft^2$) | Wt. (lbs) | EPA ($ft^2$) | Wt. (lbs) | EPA ($ft^2$) | Wt. (lbs) | EPA ($ft^2$) | Wt. (lbs) |
| RNAH-08-04-A9-AB | 15.1 | 378 | 11.3 | 283 | 8.6 | 215 | 6.8 | 170 | 5.6 | 140 |
| RNAH-10-04-A9-AB | 11.2 | 280 | 8.2 | 205 | 6.1 | 153 | 4.7 | 118 | 3.8 | 95 |
| RNAH-10-05-A9-AB | 18.5 | 463 | 13.8 | 345 | 10.8 | 270 | 8.6 | 215 | 7.0 | 175 |
| RNAH-12-04-A9-AB | 8.5 | 213 | 6.1 | 153 | 4.4 | 110 | 3.3 | 83 | 2.6 | 65 |
| RNAH-12-05-A9-AB | 14.4 | 360 | 10.5 | 263 | 8.2 | 205 | 6.5 | 163 | 5.3 | 133 |
| RNAH-12-05-B9-AB | 18.2 | 455 | 13.5 | 338 | 10.5 | 263 | 8.4 | 210 | 6.8 | 170 |
| RNAH-12-05-V9-AB | 22.0 | 550 | 16.4 | 410 | 12.8 | 320 | 10.2 | 255 | 8.3 | 208 |
| RNAH-14-04-A9-AB | 6.5 | 163 | 4.4 | 110 | 3.0 | 75 | 2.1 | 53 | 1.6 | 40 |
| RNAH-14-05-A9-AB | 11.3 | 283 | 8.1 | 203 | 6.2 | 155 | 4.9 | 123 | 3.9 | 98 |
| RNAH-14-05-B9-AB | 14.5 | 363 | 10.6 | 265 | 8.2 | 205 | 6.5 | 163 | 5.2 | 130 |
| RNAH-14-05-V9-AB | 17.7 | 443 | 13.0 | 325 | 10.1 | 253 | 8.0 | 200 | 6.5 | 163 |
| RNAH-16-04-A9-AB | 4.9 | 123 | 3.1 | 78 | 1.9 | 48 | 1.2 | 30 | 0.8 | 20 |
| RNAH-16-05-A9-AB | 8.9 | 223 | 6.2 | 155 | 4.7 | 118 | 3.6 | 90 | 2.8 | 70 |
| RNAH-16-05-B9-AB | 11.6 | 290 | 8.3 | 208 | 6.3 | 158 | 5.0 | 125 | 4.0 | 100 |
| RNAH-16-05-V9-AB | 14.4 | 360 | 10.4 | 260 | 8.0 | 200 | 6.3 | 158 | 5.1 | 128 |
| RNAH-16-06-B9-AB | 18.4 | 460 | 13.8 | 345 | 10.7 | 268 | 8.5 | 214 | 6.9 | 173 |
| RNAH-16-06-V9-AB | 22.5 | 563 | 17.0 | 425 | 13.2 | 330 | 10.6 | 265 | 8.6 | 215 |
| RNAH-18-05-A9-AB | 6.8 | 170 | 4.5 | 113 | 3.3 | 83 | 2.5 | 63 | 1.9 | 48 |
| RNAH-18-05-B9-AB | 9.2 | 230 | 6.4 | 160 | 4.8 | 120 | 3.7 | 93 | 2.9 | 73 |
| RNAH-18-05-V9-AB | 11.6 | 290 | 8.2 | 205 | 6.2 | 155 | 4.9 | 123 | 3.9 | 98 |
| RNAH-18-06-V9-AB | 18.8 | 470 | 14.1 | 353 | 10.9 | 273 | 8.6 | 215 | 7.0 | 175 |
| RNAH-20-05-A9-AB | 5.1 | 128 | 3.2 | 80 | 2.2 | 55 | 1.6 | 40 | 1.1 | 28 |
| RNAH-20-05-B9-AB | 7.3 | 183 | 4.8 | 120 | 3.5 | 88 | 2.6 | 65 | 2.0 | 50 |
| RNAH-20-05-V9-AB | 9.4 | 235 | 6.4 | 160 | 4.8 | 120 | 3.7 | 93 | 2.9 | 73 |
| RNAH-20-06-B9-AB | 12.5 | 313 | 9.2 | 230 | 7.0 | 175 | 5.5 | 138 | 4.4 | 110 |
| RNAH-20-06-V9-AB | 15.7 | 393 | 11.7 | 293 | 9.0 | 225 | 7.1 | 178 | 5.7 | 143 |

MAVERICK®
POLES AND STRUCTURE, LLC.

# Round Non-Tapered Aluminum Hinged

## FOUNDATIONS (RNAH-AB)

| Catalog Number | Foundation Data | | | | | | Anchor Bolt Data | |
|---|---|---|---|---|---|---|---|---|
| | Caisson Diameter (in) | Caisson Depth (ft) | Vert Rebar Qty | Vert Rebar Size | Concrete Volume (Cu Yds) | Steel Weight (lbs) | Dia x Lgth x Hk | Bolt Circle Range (in) |
| RNAH-08-04-A9-AB | 24 | 5.00 | 8 | #5 | 0.58 | 59 | 0.75 x 17 x 3 | 8.5 to 10 |
| RNAH-10-04-A9-AB | 24 | 5.00 | 8 | #5 | 0.58 | 59 | 0.75 x 17 x 3 | 8.5 to 10 |
| RNAH-10-05-A9-AB | 24 | 5.00 | 8 | #5 | 0.58 | 59 | 0.75 x 17 x 3 | 8.5 to 10 |
| RNAH-12-04-A9-AB | 24 | 5.00 | 8 | #5 | 0.58 | 59 | 0.75 x 17 x 3 | 8.5 to 10 |
| RNAH-12-05-A9-AB | 24 | 5.00 | 8 | #5 | 0.58 | 59 | 0.75 x 17 x 3 | 8.5 to 10 |
| RNAH-12-05-B9-AB | 24 | 5.00 | 8 | #5 | 0.58 | 59 | 0.75 x 17 x 3 | 8.5 to 10 |
| RNAH-12-05-V9-AB | 24 | 5.00 | 8 | #5 | 0.58 | 59 | 0.75 x 17 x 3 | 8.5 to 10 |
| RNAH-14-04-A9-AB | 24 | 5.00 | 8 | #5 | 0.58 | 59 | 0.75 x 17 x 3 | 8.5 to 10 |
| RNAH-14-05-A9-AB | 24 | 5.00 | 8 | #5 | 0.58 | 59 | 0.75 x 17 x 3 | 8.5 to 10 |
| RNAH-14-05-B9-AB | 24 | 5.00 | 8 | #5 | 0.58 | 59 | 0.75 x 17 x 3 | 8.5 to 10 |
| RNAH-14-05-V9-AB | 24 | 5.00 | 8 | #5 | 0.58 | 59 | 0.75 x 17 x 3 | 8.5 to 10 |
| RNAH-16-04-A9-AB | 24 | 5.00 | 8 | #5 | 0.58 | 59 | 0.75 x 17 x 3 | 8.5 to 10 |
| RNAH-16-05-A9-AB | 24 | 5.00 | 8 | #5 | 0.58 | 59 | 0.75 x 17 x 3 | 8.5 to 10 |
| RNAH-16-05-B9-AB | 24 | 5.00 | 8 | #5 | 0.58 | 59 | 0.75 x 17 x 3 | 8.5 to 10 |
| RNAH-16-05-V9-AB | 24 | 5.00 | 8 | #5 | 0.58 | 59 | 0.75 x 17 x 3 | 8.5 to 10 |
| RNAH-16-06-B9-AB | 24 | 5.00 | 8 | #5 | 0.58 | 59 | 0.75 x 17 x 3 | 8.5 to 10 |
| RNAH-16-06-V9-AB | 24 | 5.00 | 8 | #5 | 0.58 | 59 | 0.75 x 17 x 3 | 8.5 to 10 |
| RNAH-18-05-A9-AB | 24 | 5.00 | 8 | #5 | 0.58 | 59 | 0.75 x 17 x 3 | 8.5 to 10 |
| RNAH-18-05-B9-AB | 24 | 5.00 | 8 | #5 | 0.58 | 59 | 0.75 x 17 x 3 | 8.5 to 10 |
| RNAH-18-05-V9-AB | 24 | 5.00 | 8 | #5 | 0.58 | 59 | 0.75 x 17 x 3 | 8.5 to 10 |
| RNAH-18-06-V9-AB | 24 | 5.00 | 8 | #5 | 0.58 | 59 | 0.75 x 17 x 3 | 8.5 to 10 |
| RNAH-20-05-A9-AB | 24 | 5.00 | 8 | #5 | 0.58 | 59 | 0.75 x 17 x 3 | 8.5 to 10 |
| RNAH-20-05-B9-AB | 24 | 5.00 | 8 | #5 | 0.58 | 59 | 0.75 x 17 x 3 | 8.5 to 10 |
| RNAH-20-05-V9-AB | 24 | 5.00 | 8 | #5 | 0.58 | 59 | 0.75 x 17 x 3 | 8.5 to 10 |
| RNAH-20-06-B9-AB | 24 | 5.00 | 8 | #5 | 0.58 | 59 | 0.75 x 17 x 3 | 8.5 to 10 |
| RNAH-20-06-V9-AB | 24 | 5.00 | 8 | #5 | 0.58 | 59 | 0.75 x 17 x 3 | 8.5 to 10 |

**Notes:**

1. **The above information is for estimating purposes only. Do not use for construction.**
2. **Analysis is based upon Brom's method of foundation design.**
3. **All of the designs are based upon the following soil parameters:**
   - **a. Soil is homogeneous, non-cohesive**
   - **b. $\phi$ = 30 degrees**
   - **c. $\gamma$ = 110 pcf.**
   - **d. Water table is below bottom of foundation.**
   - **e. Site grade is 7H:1V or flatter.**
4. **Concrete 28 day compressive strength = 3000 psi.**
5. **Reinforcing meets the requirements of ASTM A615 grade 60.**
6. **Concrete design is in accordance with ACI 318-95.**
7. **Concrete is cast against undisturbed soil.**
8. **All reinforcing must be covered by a minimum of 3" of concrete on all sides.**
9. **All vertical reinforcing bars are equally spaced.**
10. **#4 reinforcing bars are used as hoops and are spaced on 12" centers.**

NOT FOR CONSTRUCTION.
FOR ESTIMATION ONLY.

*The information above is provided for preliminary estimating use only and may not be used as final or construction designs.*

# Round Non-Tapered Aluminum Hinged

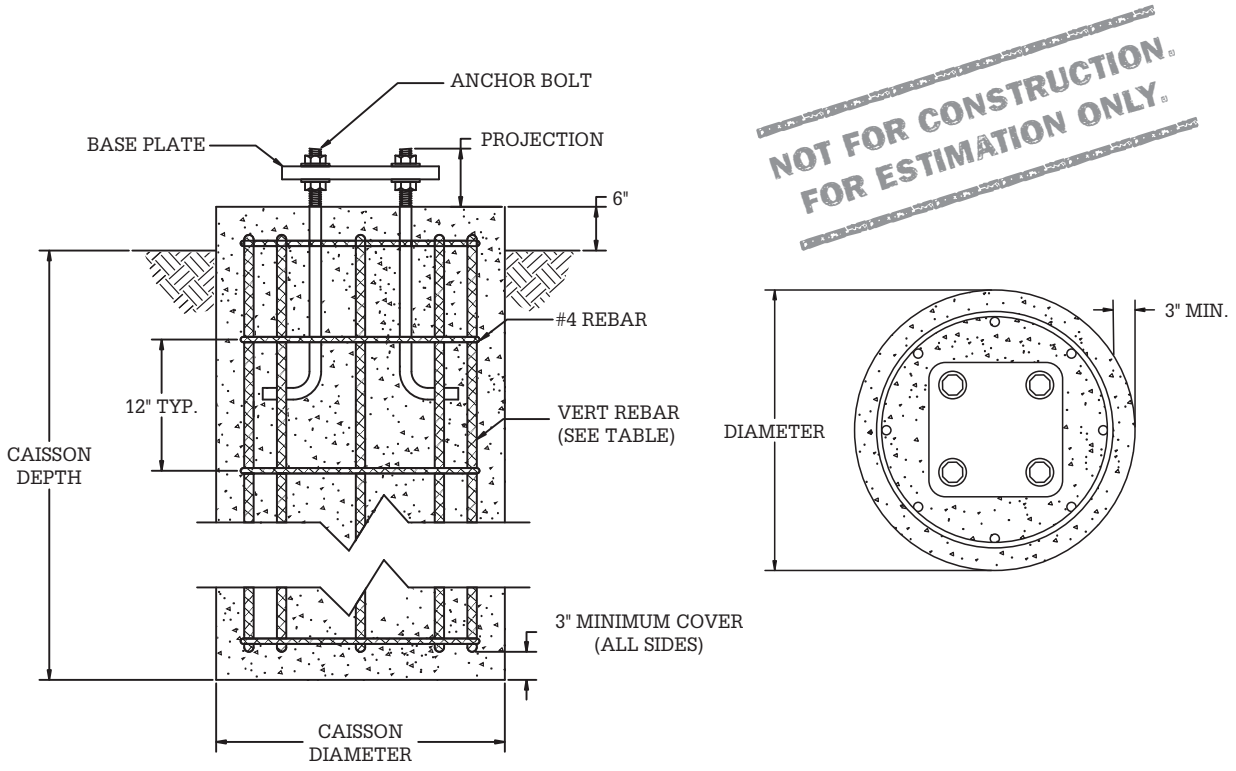

# Square Non-Tapered Hinged Aluminum Poles

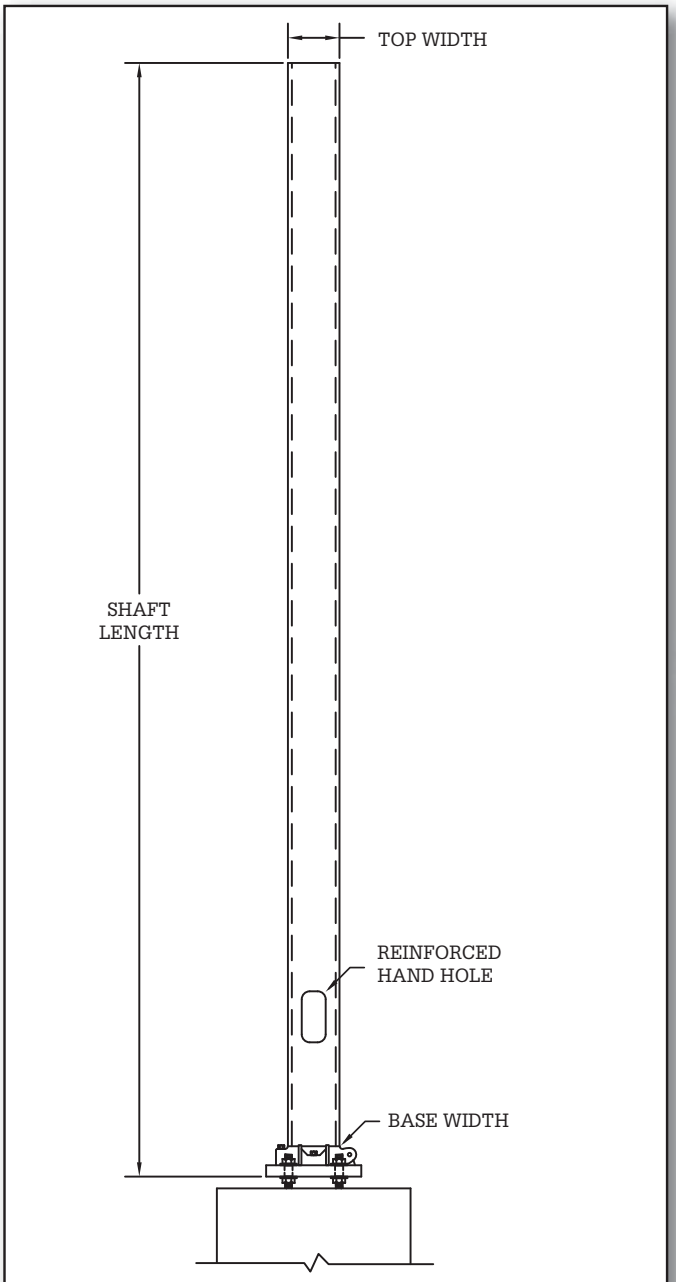


DETAIL | **POLE ASSEMBLY**

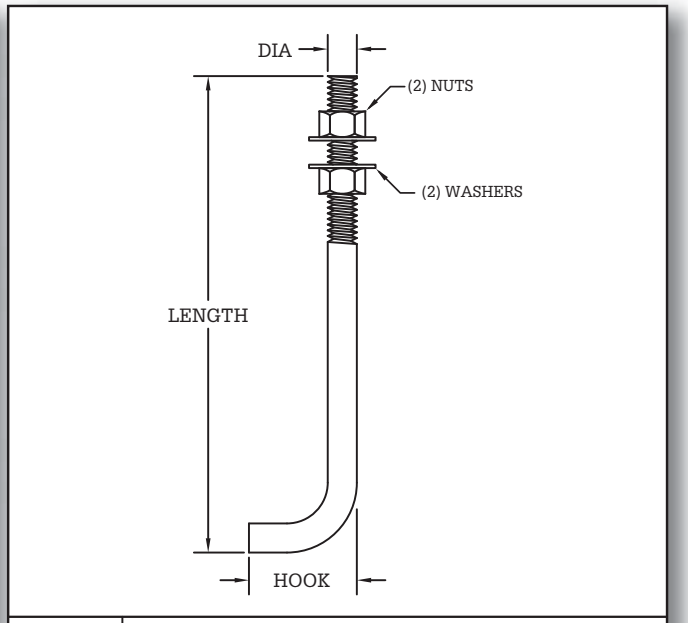


DETAIL 1 | **ANCHOR BOLT**

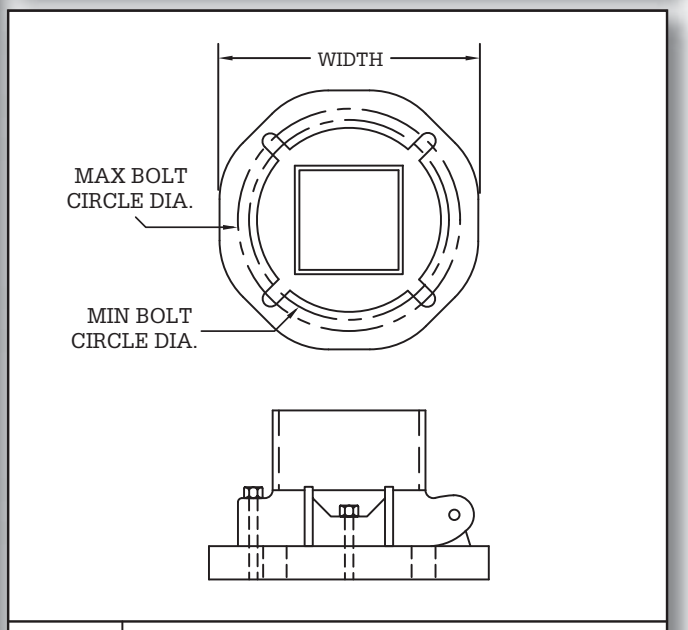


DETAIL 2 | **BASEPLATE**

MAVERICK® POLES AND STRUCTURE, LLC.

# Square Non-Tapered Hinged Aluminum Poles

## STRUCTURE DATA

| Catalog Number | Gross Weight (Lbs) | Pole Shaft Data | | | | Base Plate Data | | Anchor Bolt Data |
|---|---|---|---|---|---|---|---|---|
| | | Base Width (in) | Top Width (in) | Wall Thk. (in) | Shaft Length (ft) | Bolt Circle Range (in) | Plate Width (in) | Dia x Lgth x Hk |
| SNAH-08-04-A9-AB | 44 | 4.0 | 4.0 | 0.125 | 8.00 | 8.5 to 10 | 11.69 | 0.75 x 17 x 3 |
| SNAH-10-04-A9-AB | 48 | 4.0 | 4.0 | 0.125 | 10.00 | 8.5 to 10 | 11.69 | 0.75 x 17 x 3 |
| SNAH-12-04-A9-AB | 53 | 4.0 | 4.0 | 0.125 | 12.00 | 8.5 to 10 | 11.69 | 0.75 x 17 x 3 |
| SNAH-14-04-A9-AB | 57 | 4.0 | 4.0 | 0.125 | 14.00 | 8.5 to 10 | 11.69 | 0.75 x 17 x 3 |
| SNAH-15-04-A9-AB | 60 | 4.0 | 4.0 | 0.125 | 15.00 | 8.5 to 10 | 11.69 | 0.75 x 17 x 3 |
| SNAH-16-04-A9-AB | 62 | 4.0 | 4.0 | 0.125 | 16.00 | 8.5 to 10 | 11.69 | 0.75 x 17 x 3 |
| SNAH-16-04-V9-AB | 70 | 4.0 | 4.0 | 0.188 | 16.00 | 8.5 to 10 | 11.69 | 0.75 x 17 x 3 |
| SNAH-18-04-A9-AB | 67 | 4.0 | 4.0 | 0.125 | 18.00 | 8.5 to 10 | 11.69 | 0.75 x 17 x 3 |
| SNAH-18-04-V9-AB | 77 | 4.0 | 4.0 | 0.188 | 18.00 | 8.5 to 10 | 11.69 | 0.75 x 17 x 3 |
| SNAH-18-05-V9-AB | 80 | 5.0 | 5.0 | 0.188 | 18.00 | 9.56 to 10 | 11.69 | 0.75 x 17 x 3 |
| SNAH-20-04-V9-AB | 84 | 4.0 | 4.0 | 0.188 | 20.00 | 8.5 to 10 | 11.69 | 0.75 x 17 x 3 |
| SNAH-20-05-V9-AB | 89 | 5.0 | 5.0 | 0.188 | 20.00 | 9.56 to 10 | 11.69 | 0.75 x 17 x 3 |

## STRUCTURE LOADING CAPACITIES

| Catalog Number | Maximum Loading | | | | | | | | | |
|---|---|---|---|---|---|---|---|---|---|---|
| | 70 mph | | 80 mph | | 90 mph | | 100 mph | | 110 mph | |
| | EPA ($ft^2$) | Wt. (lbs) | EPA ($ft^2$) | Wt. (lbs) | EPA ($ft^2$) | Wt. (lbs) | EPA ($ft^2$) | Wt. (lbs) | EPA ($ft^2$) | Wt. (lbs) |
| SNAH-08-04-A9-AB | 21.0 | 525 | 15.5 | 388 | 11.6 | 290 | 8.9 | 223 | 6.9 | 173 |
| SNAH-10-04-A9-AB | 16.5 | 413 | 11.8 | 295 | 8.6 | 215 | 6.3 | 158 | 4.6 | 115 |
| SNAH-12-04-A9-AB | 20.8 | 520 | 15.2 | 380 | 11.3 | 283 | 8.6 | 215 | 6.5 | 163 |
| SNAH-14-04-A9-AB | 13.2 | 330 | 9.3 | 233 | 6.7 | 168 | 4.8 | 120 | 3.4 | 85 |
| SNAH-15-04-A9-AB | 11.3 | 283 | 7.8 | 195 | 5.4 | 135 | 3.7 | 93 | 2.4 | 60 |
| SNAH-16-04-A9-AB | 9.7 | 243 | 6.5 | 163 | 4.3 | 108 | 2.7 | 68 | 1.5 | 38 |
| SNAH-16-04-V9-AB | 16.4 | 410 | 11.6 | 290 | 8.3 | 208 | 5.9 | 148 | 2.0 | 50 |
| SNAH-18-04-A9-AB | 7.6 | 190 | 4.6 | 115 | 2.6 | 65 | 1.2 | 30 | --- | --- |
| SNAH-18-04-V9-AB | 13.0 | 325 | 8.8 | 220 | 5.9 | 148 | 3.8 | 95 | 2.3 | 58 |
| SNAH-18-05-V9-AB | 23.5 | 588 | 16.4 | 410 | 11.6 | 290 | 8.3 | 208 | 5.7 | 143 |
| SNAH-20-04-V9-AB | 10.0 | 250 | 6.3 | 158 | 3.7 | 93 | 1.9 | 48 | --- | --- |
| SNAH-20-05-V9-AB | 19.5 | 488 | 13.2 | 330 | 8.8 | 220 | 5.8 | 145 | 3.5 | 88 |

MAVERICK®
POLES AND STRUCTURE, LLC.

# Square Non-Tapered Aluminum Hinged

## FOUNDATIONS (SNAH-AB)

| Catalog Number | Foundation Data | | | | | | Anchor Bolt |
|---|---|---|---|---|---|---|---|
| | Caisson Diameter (in) | Caisson Depth (ft) | Vert Rebar Qty | Vert Rebar Size | Concrete Volume (Cu Yds) | Steel Weight (lbs) | Dia x Lgth x Hk |
| SNAH-08-04-A9-AB | 24 | 5.00 | 8 | #5 | 0.58 | 59 | 0.75 x 17 x 3 |
| SNAH-10-04-A9-AB | 24 | 5.00 | 8 | #5 | 0.58 | 59 | 0.75 x 17 x 3 |
| SNAH-12-04-A9-AB | 24 | 5.00 | 8 | #5 | 0.58 | 59 | 0.75 x 17 x 3 |
| SNAH-14-04-A9-AB | 24 | 5.00 | 8 | #5 | 0.58 | 59 | 0.75 x 17 x 3 |
| SNAH-15-04-A9-AB | 24 | 5.00 | 8 | #5 | 0.58 | 59 | 0.75 x 17 x 3 |
| SNAH-16-04-A9-AB | 24 | 5.00 | 8 | #5 | 0.58 | 59 | 0.75 x 17 x 3 |
| SNAH-16-04-V9-AB | 24 | 5.00 | 8 | #5 | 0.58 | 59 | 0.75 x 17 x 3 |
| SNAH-18-04-A9-AB | 24 | 5.00 | 8 | #5 | 0.58 | 59 | 0.75 x 17 x 3 |
| SNAH-18-04-V9-AB | 24 | 5.00 | 8 | #5 | 0.58 | 59 | 0.75 x 17 x 3 |
| SNAH-18-05-V9-AB | 24 | 5.00 | 8 | #5 | 0.58 | 59 | 0.75 x 17 x 3 |
| SNAH-20-04-V9-AB | 24 | 5.00 | 8 | #5 | 0.58 | 59 | 0.75 x 17 x 3 |
| SNAH-20-05-V9-AB | 24 | 5.00 | 8 | #5 | 0.58 | 59 | 0.75 x 17 x 3 |

Notes:
1. The above information is for estimating purposes only. Do not use for construction.
2. Analysis is based upon Brom's method of foundation design.
3. All of the designs are based upon the following soil parameters:
   a. Soil is homogeneous, non-cohesive
   b. $\phi$ = 30 degrees
   c. $\gamma$ = 110 pcf.
   d. Water table is below bottom of foundation.
   e. Site grade is 7H:1V or flatter.
4. Concrete 28 day compressive strength = 3000 psi.
5. Reinforcing meets the requirements of ASTM A615 grade 60.
6. Concrete design is in accordance with ACI 318-95.
7. Concrete is cast against undisturbed soil.
8. All reinforcing must be covered by a minimum of 3" of concrete on all sides.
9. All vertical reinforcing bars are equally spaced.
10. #4 reinforcing bars are used as hoops and are spaced on 12" centers.

NOT FOR CONSTRUCTION
FOR ESTIMATION ONLY

*The information above is provided for preliminary estimating use only and may not be used as final or construction designs.*

MAVERICK®
POLES AND STRUCTURE, LLC.

# Square Non-Tapered Aluminum Hinged

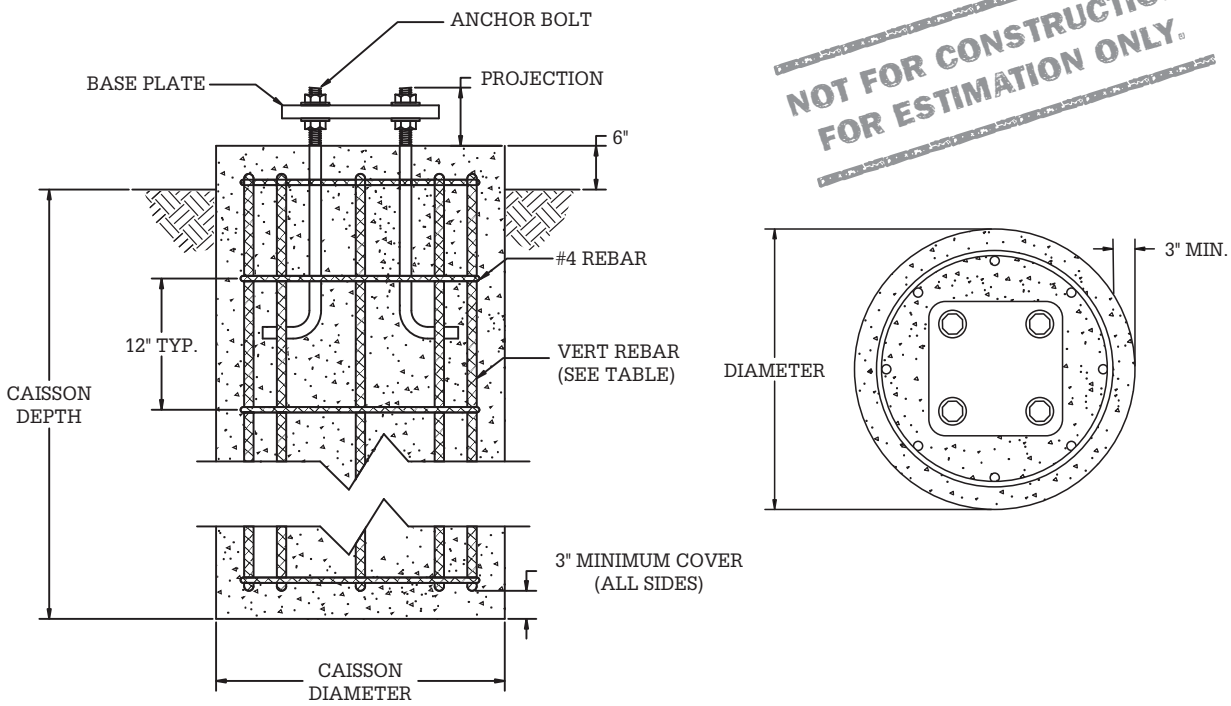


NOT FOR CONSTRUCTION
FOR ESTIMATION ONLY

1. SEE TABLE FOR ACTUAL BOLT QUANTITY, BOLTS AND REBAR QUANTITIES SHOWN ARE FOR ILLUSTRATION PURPOSES ONLY.

*The information above is provided for preliminary estimating use only and may not be used as final or construction designs.*

MAVERICK®
POLES AND STRUCTURE, LLC.

# Roadway – 1PA-Series

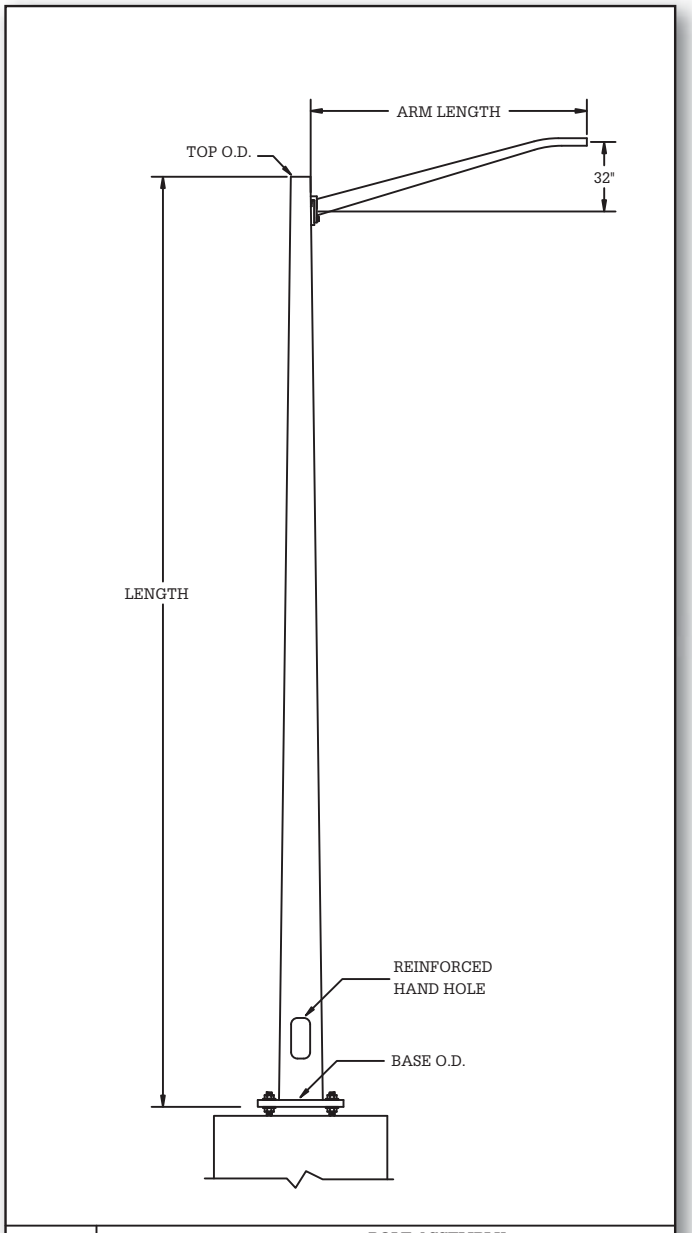


DETAIL | **POLE ASSEMBLY**

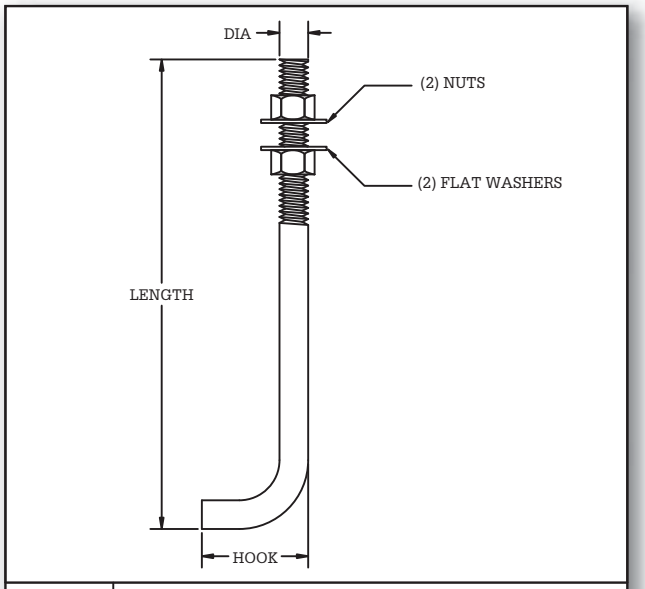


DETAIL 1 | **ANCHOR-BOLT**

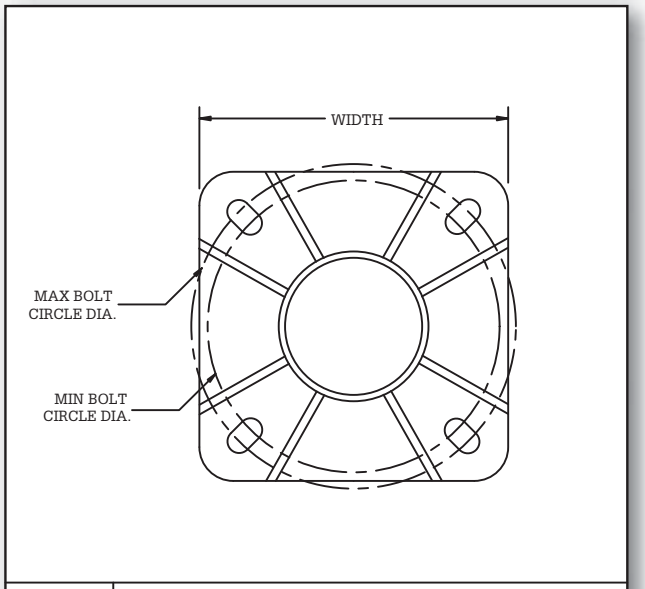


DETAIL 2 | **BASEPLATE**

MAVERICK®
POLES AND STRUCTURE, LLC.

# *Roadway – 1PA-Series*

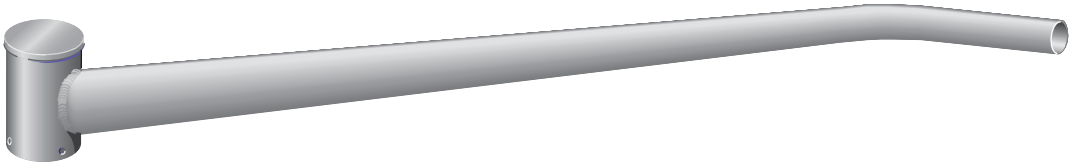

**Hub Mount**

**Bolt Mount**

**Simplex Mount**

**Clamp Mount**

MAVERICK®
POLES AND STRUCTURE, LLC.

# Roadway – 1PA-Series

## STRUCTURE DATA

| Catalog Number | Mounting Height (ft) | Gross Weight (Lbs) | Pole Shaft Data | | | | Arm | Base Plate Data | | Anchor Bolt Data |
|---|---|---|---|---|---|---|---|---|---|---|
| | | | Base O.D. (in) | Top O.D. (in) | Wall Thk. (in) | Shaft Length (ft) | Length (ft) | Bolt Circle Range (in) | Plate Square (in) | Dia x Lgth x Hk |
| RDWA-25-60B-106XT | 25 | 117 | 6.0 | 4.0 | 0.156 | 22.66 | 6 | 8.75 to 10.25 | 10.25 | 0.75 x 17 x 3 |
| RDWA-25-60V-106XT | 25 | 129 | 6.0 | 4.0 | 0.188 | 22.66 | 6 | 8.75 to 10.25 | 10.25 | 0.75 x 17 x 3 |
| RDWA-25-70B-106XT | 25 | 144 | 7.0 | 4.0 | 0.156 | 22.66 | 6 | 9.875 to 11.25 | 10.63 | 1 x 36 x 4 |
| RDWA-25-80B-106XT | 25 | 156 | 8.0 | 4.5 | 0.156 | 22.66 | 6 | 11 to 12.125 | 11.63 | 1 x 36 x 4 |
| RDWA-25-60B-108XT | 25 | 118 | 6.0 | 4.0 | 0.156 | 22.66 | 8 | 8.75 to 10.25 | 10.25 | 0.75 x 17 x 3 |
| RDWA-25-60V-108XT | 25 | 130 | 6.0 | 4.0 | 0.188 | 22.66 | 8 | 8.75 to 10.25 | 10.25 | 0.75 x 17 x 3 |
| RDWA-25-70B-108XT | 25 | 145 | 7.0 | 4.0 | 0.156 | 22.66 | 8 | 9.875 to 11.25 | 10.63 | 1 x 36 x 4 |
| RDWA-25-80B-108XT | 25 | 157 | 8.0 | 4.5 | 0.156 | 22.66 | 8 | 11 to 12.125 | 11.63 | 1 x 36 x 4 |
| RDWA-25-80B-110XT | 25 | 164 | 8.0 | 4.5 | 0.156 | 22.66 | 10 | 11 to 12.125 | 11.63 | 1 x 36 x 4 |
| RDWA-25-80B-112XT | 25 | 169 | 8.0 | 4.5 | 0.156 | 22.66 | 12 | 11 to 12.125 | 11.63 | 1 x 36 x 4 |
| RDWA-25-80B-115XT | 25 | 179 | 8.0 | 4.5 | 0.156 | 22.66 | 15 | 11 to 12.125 | 11.63 | 1 x 36 x 4 |
| RDWA-30-70B-106XT | 30 | 168 | 7.0 | 4.0 | 0.156 | 27.66 | 6 | 9.875 to 11.25 | 10.63 | 1 x 36 x 4 |
| RDWA-30-80B-106XT | 30 | 172 | 8.0 | 4.5 | 0.156 | 27.66 | 6 | 11 to 12.125 | 11.63 | 1 x 36 x 4 |
| RDWA-30-70B-108XT | 30 | 169 | 7.0 | 4.0 | 0.156 | 27.66 | 8 | 9.875 to 11.25 | 10.63 | 1 x 36 x 4 |
| RDWA-30-80B-108XT | 30 | 173 | 8.0 | 4.5 | 0.156 | 27.66 | 8 | 11 to 12.125 | 11.63 | 1 x 36 x 4 |
| RDWA-30-80B-110XT | 30 | 180 | 8.0 | 4.5 | 0.156 | 27.66 | 10 | 11 to 12.125 | 11.63 | 1 x 36 x 4 |
| RDWA-30-80V-110XT | 30 | 203 | 8.0 | 4.5 | 0.188 | 27.66 | 10 | 11 to 12.125 | 11.63 | 1 x 36 x 4 |
| RDWA-30-80B-112XT | 30 | 185 | 8.0 | 4.5 | 0.156 | 27.66 | 12 | 11 to 12.125 | 11.63 | 1 x 36 x 4 |
| RDWA-30-80V-112XT | 30 | 208 | 8.0 | 4.5 | 0.188 | 27.66 | 12 | 11 to 12.125 | 11.63 | 1 x 36 x 4 |
| RDWA-30-80V-115XT | 30 | 218 | 8.0 | 4.5 | 0.188 | 27.66 | 15 | 11 to 12.125 | 11.63 | 1 x 36 x 4 |
| RDWA-35-80B-106XT | 35 | 199 | 8.0 | 4.5 | 0.156 | 32.66 | 6 | 11 to 12.125 | 11.63 | 1 x 36 x 4 |
| RDWA-35-80V-106XT | 35 | 226 | 8.0 | 4.5 | 0.188 | 32.66 | 6 | 11 to 12.125 | 11.63 | 1 x 36 x 4 |
| RDWA-35-80H-106XT | 35 | 275 | 8.0 | 4.5 | 0.250 | 32.66 | 6 | 11 to 12.125 | 11.63 | 1 x 36 x 4 |
| RDWA-35-80B-108XT | 35 | 276 | 8.0 | 4.5 | 0.156 | 32.66 | 8 | 11 to 12.125 | 11.63 | 1 x 36 x 4 |
| RDWA-35-80V-108XT | 35 | 227 | 8.0 | 4.5 | 0.188 | 32.66 | 8 | 11 to 12.125 | 11.63 | 1 x 36 x 4 |
| RDWA-35-80H-108XT | 35 | 276 | 8.0 | 4.5 | 0.250 | 32.66 | 8 | 11 to 12.125 | 11.63 | 1 x 36 x 4 |
| RDWA-35-80B-110XT | 35 | 207 | 8.0 | 4.5 | 0.156 | 32.66 | 10 | 11 to 12.125 | 11.63 | 1 x 36 x 4 |
| RDWA-35-80V-110XT | 35 | 234 | 8.0 | 4.5 | 0.188 | 32.66 | 10 | 11 to 12.125 | 11.63 | 1 x 36 x 4 |
| RDWA-35-80H-110XT | 35 | 283 | 8.0 | 4.5 | 0.250 | 32.66 | 10 | 11 to 12.125 | 11.63 | 1 x 36 x 4 |
| RDWA-35-80V-112XT | 35 | 239 | 8.0 | 4.5 | 0.188 | 32.66 | 12 | 11 to 12.125 | 11.63 | 1 x 36 x 4 |
| RDWA-35-80H-112XT | 35 | 288 | 8.0 | 4.5 | 0.250 | 32.66 | 12 | 11 to 12.125 | 11.63 | 1 x 36 x 4 |
| RDWA-35-80H-115XT | 35 | 298 | 8.0 | 4.5 | 0.250 | 32.66 | 15 | 11 to 12.125 | 11.63 | 1 x 36 x 4 |
| RDWA-39-80V-106XT | 39 | 248 | 8.0 | 4.5 | 0.188 | 36.66 | 6 | 11 to 12.125 | 11.63 | 1 x 36 x 4 |
| RDWA-39-80H-106XT | 39 | 310 | 8.0 | 4.5 | 0.250 | 36.66 | 6 | 11 to 12.125 | 11.63 | 1 x 36 x 4 |
| RDWA-39-80V-108XT | 39 | 249 | 8.0 | 4.5 | 0.188 | 36.66 | 8 | 11 to 12.125 | 11.63 | 1 x 36 x 4 |
| RDWA-39-80H-108XT | 39 | 311 | 8.0 | 4.5 | 0.250 | 36.66 | 8 | 11 to 12.125 | 11.63 | 1 x 36 x 4 |
| RDWA-39-80V-110XT | 39 | 256 | 8.0 | 4.5 | 0.188 | 36.66 | 10 | 11 to 12.125 | 11.63 | 1 x 36 x 4 |
| RDWA-39-80H-110XT | 39 | 318 | 8.0 | 4.5 | 0.250 | 36.66 | 10 | 11 to 12.125 | 11.63 | 1 x 36 x 4 |
| RDWA-39-10V-110XT | 39 | 301 | 10.0 | 6.0 | 0.188 | 36.66 | 10 | 14.5 | 14.5 | 1 x 36 x 4 |
| RDWA-39-80H-112XT | 39 | 323 | 8.0 | 4.5 | 0.250 | 36.66 | 12 | 11 to 12.125 | 11.63 | 1 x 36 x 4 |
| RDWA-39-10V-112XT | 39 | 306 | 10.0 | 6.0 | 0.188 | 36.66 | 12 | 14.5 | 14.5 | 1 x 36 x 4 |
| RDWA-39-80H-115XT | 39 | 333 | 8.0 | 4.5 | 0.250 | 36.66 | 15 | 11 to 12.125 | 11.63 | 1 x 36 x 4 |

**Replace "X" with the Following:**

H - Hub-mounted
B - Bolt-mounted
S - Simplex-mounted
C - Clamp-mounted

MAVERICK®
POLES AND STRUCTURE, LLC.

# Roadway – 1PA-Series

## STRUCTURE LOADING CAPACITIES

| Catalog Number | Maximum Loading | | | | | | | | | |
|---|---|---|---|---|---|---|---|---|---|---|
| | 70 mph | | 80 mph | | 90 mph | | 100 mph | | 110 mph | |
| | EPA (ft2) | Wt. (lbs) | EPA (ft2) | Wt. (lbs) | EPA (ft2) | Wt. (lbs) | EPA (ft2) | Wt. (lbs) | EPA (ft2) | Wt. (lbs) |
| RDWA-25-60B-106XT | 6.0 | 150 | 4.4 | 110 | 2.8 | 70 | 1.8 | 45 | 1.1 | 28 |
| RDWA-25-60V-106XT | 6.0 | 150 | 6.0 | 150 | 4.3 | 108 | 3.0 | 75 | 2.1 | 53 |
| RDWA-25-70B-106XT | 6.0 | 150 | 6.0 | 150 | 5.7 | 143 | 4.2 | 105 | 3.1 | 78 |
| RDWA-25-80B-106XT | 6.0 | 150 | 6.0 | 150 | 6.0 | 150 | 6.0 | 150 | 5.3 | 133 |
| RDWA-25-60B-108XT | 6.0 | 150 | 4.1 | 103 | 2.5 | 63 | 1.6 | 40 | 0.9 | 23 |
| RDWA-25-60V-108XT | 6.0 | 150 | 5.8 | 145 | 3.9 | 98 | 2.7 | 68 | 1.8 | 45 |
| RDWA-25-70B-108XT | 6.0 | 150 | 6.0 | 150 | 5.2 | 130 | 3.8 | 95 | 2.8 | 70 |
| RDWA-25-80B-108XT | 6.0 | 150 | 6.0 | 150 | 6.0 | 150 | 6.0 | 150 | 4.9 | 123 |
| RDWA-25-80B-110XT | 6.0 | 150 | 6.0 | 150 | 5.8 | 145 | 4.7 | 118 | 3.9 | 98 |
| RDWA-25-80B-112XT | 6.0 | 150 | 5.9 | 148 | 4.3 | 108 | 3.3 | 83 | 2.7 | 68 |
| RDWA-25-80B-115XT | 5.8 | 145 | 4.1 | 103 | 3.1 | 78 | 2.3 | 58 | 1.8 | 45 |
| RDWA-30-70B-106XT | 6.0 | 150 | 4.7 | 118 | 3.0 | 75 | 1.9 | 48 | 1.2 | 30 |
| RDWA-30-80B-106XT | 6.0 | 150 | 6.0 | 150 | 5.9 | 148 | 4.3 | 108 | 3.1 | 78 |
| RDWA-30-70B-108XT | 6.0 | 150 | 4.4 | 110 | 2.7 | 68 | 1.7 | 43 | 0.9 | 23 |
| RDWA-30-80B-108XT | 6.0 | 150 | 6.0 | 150 | 5.5 | 138 | 3.9 | 98 | 2.8 | 70 |
| RDWA-30-80B-110XT | 6.0 | 150 | 6.0 | 150 | 4.9 | 123 | 3.5 | 88 | 2.4 | 60 |
| RDWA-30-80V-110XT | 6.0 | 150 | 6.0 | 150 | 5.8 | 145 | 4.7 | 118 | 3.8 | 95 |
| RDWA-30-80B-112XT | 6.0 | 150 | 5.9 | 148 | 4.3 | 108 | 3.2 | 80 | 2.1 | 53 |
| RDWA-30-80V-112XT | 6.0 | 150 | 5.9 | 148 | 4.3 | 108 | 3.3 | 83 | 2.7 | 68 |
| RDWA-30-80V-115XT | 5.8 | 145 | 4.1 | 103 | 3.1 | 78 | 2.3 | 58 | 1.8 | 45 |
| RDWA-35-80B-106XT | 6.0 | 150 | 5.0 | 125 | 3.3 | 83 | 2.1 | 53 | 1.2 | 30 |
| RDWA-35-80V-106XT | 6.0 | 150 | 6.0 | 150 | 5.2 | 130 | 3.6 | 90 | 2.5 | 63 |
| RDWA-35-80H-106XT | 6.0 | 150 | 6.0 | 150 | 6.0 | 150 | 6.0 | 150 | 4.8 | 120 |
| RDWA-35-80B-108XT | 6.0 | 150 | 4.7 | 118 | 3.0 | 75 | 1.8 | 45 | 1.0 | 25 |
| RDWA-35-80V-108XT | 6.0 | 150 | 6.0 | 150 | 4.8 | 120 | 3.3 | 83 | 2.2 | 55 |
| RDWA-35-80H-108XT | 6.0 | 150 | 6.0 | 150 | 6.0 | 150 | 6.0 | 150 | 4.5 | 113 |
| RDWA-35-80B-110XT | 6.0 | 150 | 4.3 | 108 | 2.6 | 65 | 1.5 | 38 | 0.7 | 18 |
| RDWA-35-80V-110XT | 6.0 | 150 | 6.0 | 150 | 4.4 | 110 | 3.0 | 75 | 1.9 | 48 |
| RDWA-35-80H-110XT | 6.0 | 150 | 6.0 | 150 | 5.8 | 145 | 4.7 | 118 | 3.9 | 98 |
| RDWA-35-80V-112XT | 6.0 | 150 | 5.9 | 148 | 4.1 | 103 | 2.7 | 68 | 1.6 | 40 |
| RDWA-35-80H-112XT | 6.0 | 150 | 5.9 | 148 | 4.3 | 108 | 3.3 | 83 | 2.7 | 68 |
| RDWA-35-80H-115XT | 5.8 | 145 | 4.1 | 103 | 3.1 | 78 | 2.3 | 58 | 1.8 | 45 |
| RDWA-39-80V-106XT | 6.0 | 150 | 5.0 | 125 | 3.2 | 80 | 2.0 | 50 | 1.1 | 28 |
| RDWA-39-80H-106XT | 6.0 | 150 | 6.0 | 150 | 6.0 | 150 | 4.5 | 113 | 3.1 | 78 |
| RDWA-39-80V-108XT | 6.0 | 150 | 4.7 | 118 | 2.9 | 73 | 1.7 | 43 | 0.8 | 20 |
| RDWA-39-80H-108XT | 6.0 | 150 | 6.0 | 150 | 6.0 | 150 | 4.2 | 105 | 2.9 | 73 |
| RDWA-39-80V-110XT | 6.0 | 150 | 4.3 | 108 | 2.6 | 65 | 1.4 | 35 | 0.5 | 13 |
| RDWA-39-80H-110XT | 6.0 | 150 | 6.0 | 150 | 5.5 | 138 | 3.8 | 95 | 2.5 | 63 |
| RDWA-39-10V-110XT | 6.0 | 150 | 6.0 | 150 | 5.8 | 145 | 4.7 | 118 | 3.9 | 98 |
| RDWA-39-80H-112XT | 6.0 | 150 | 5.9 | 148 | 4.3 | 108 | 3.3 | 83 | 2.3 | 58 |
| RDWA-39-10V-112XT | 6.0 | 150 | 5.9 | 148 | 4.3 | 108 | 3.3 | 83 | 2.7 | 68 |
| RDWA-39-80H-115XT | 5.8 | 145 | 4.1 | 103 | 3.1 | 78 | 2.3 | 58 | 1.7 | 43 |

**Replace "X" with the Following:**
H - Hub-mounted
B - Bolt-mounted
S - Simplex-mounted
C - Clamp-mounted

MAVERICK®
POLES AND STRUCTURE, LLC.

# Roadway — 1PA-Series (20' to 25')

## FOUNDATIONS (20' to 25') RDWA-1PA

| Catalog Number | Foundation Data | | | | | | Anchor Bolt Data | |
|---|---|---|---|---|---|---|---|---|
| | Caisson Diameter (in) | Caisson Depth (ft) | Vert Rebar Qty | Vert Rebar Size | Concrete Volume (Cu Yds) | Steel Weight (lbs) | Dia x Lgth x Hk | Bolt Circle Range (in) |
| RDWA-20-50B-104XP | 24 | 5.00 | 8 | #5 | 0.58 | 59 | 0.75 x 17 x 3 | 7.5 to 9.5 |
| RDWA-20-50V-104XP | 24 | 5.00 | 8 | #5 | 0.58 | 59 | 0.75 x 17 x 3 | 7.5 to 9.5 |
| RDWA-20-60B-104XP | 24 | 5.00 | 8 | #6 | 0.58 | 75 | 0.75 x 17 x 3 | 8.75 to 10.25 |
| RDWA-20-60V-104XP | 24 | 5.00 | 8 | #6 | 0.58 | 75 | 0.75 x 17 x 3 | 8.75 to 10.25 |
| RDWA-20-50B-106XP | 24 | 5.00 | 8 | #6 | 0.58 | 75 | 0.75 x 17 x 3 | 7.5 to 9.5 |
| RDWA-20-50V-106XP | 24 | 5.00 | 8 | #6 | 0.58 | 75 | 0.75 x 17 x 3 | 7.5 to 9.5 |
| RDWA-20-60B-106XP | 24 | 5.00 | 8 | #6 | 0.58 | 75 | 0.75 x 17 x 3 | 8.75 to 10.25 |
| RDWA-20-60B-108XP | 24 | 5.00 | 8 | #6 | 0.58 | 75 | 0.75 x 17 x 3 | 8.75 to 10.25 |
| RDWA-25-60B-104XP | 24 | 5.00 | 8 | #6 | 0.58 | 75 | 0.75 x 17 x 3 | 8.75 to 10.25 |
| RDWA-25-60V-104XP | 24 | 5.00 | 8 | #6 | 0.58 | 75 | 0.75 x 17 x 3 | 8.75 to 10.25 |
| RDWA-25-70B-104XP | 24 | 5.00 | 8 | #6 | 0.58 | 75 | 1 x 36 x 4 | 9.875 to 11.25 |
| RDWA-25-60B-106XP | 24 | 5.00 | 8 | #6 | 0.58 | 75 | 0.75 x 17 x 3 | 8.75 to 10.25 |
| RDWA-25-60V-106XP | 24 | 5.00 | 8 | #6 | 0.58 | 75 | 0.75 x 17 x 3 | 8.75 to 10.25 |
| RDWA-25-70B-106XP | 24 | 5.00 | 8 | #6 | 0.58 | 75 | 1 x 36 x 4 | 9.875 to 11.25 |
| RDWA-25-60B-108XP | 24 | 5.00 | 8 | #6 | 0.58 | 75 | 0.75 x 17 x 3 | 8.75 to 10.25 |
| RDWA-25-60V-108XP | 24 | 5.00 | 8 | #6 | 0.58 | 75 | 0.75 x 17 x 3 | 8.75 to 10.25 |
| RDWA-25-70B-108XP | 24 | 5.00 | 8 | #6 | 0.58 | 75 | 1 x 36 x 4 | 9.875 to 11.25 |

Notes:
1. The above information is for estimating purposes only. Do not use for construction.
2. Analysis is based upon Brom's method of foundation design.
3. All of the designs are based upon the following soil parameters:
   a. Soil is homogeneous, non-cohesive
   b. $\phi$ = 30 degrees
   c. $\gamma$ = 110 pcf.
   d. Water table is below bottom of foundation.
   e. Site grade is 7H:1V or flatter.
4. Concrete 28 day compressive strength = 3000 psi.
5. Reinforcing meets the requirements of ASTM A615 grade 60.
6. Concrete design is in accordance with ACI 318-95.
7. Concrete is cast against undisturbed soil.
8. All reinforcing must be covered by a minimum of 3" of concrete on all sides.
9. All vertical reinforcing bars are equally spaced.
10. #4 reinforcing bars are used as hoops and are spaced on 12" centers.

NOT FOR CONSTRUCTION.
FOR ESTIMATION ONLY.

*The information above is provided for preliminary estimating use only and may not be used as final or construction*

MAVERICK®
POLES AND STRUCTURE, LLC.

# Roadway — 1PA-Series (30' to 39')

## FOUNDATIONS (30' to 39') RDWA-1PA

| Catalog Number | Foundation Data | | | | | | Anchor Bolt Data | |
|---|---|---|---|---|---|---|---|---|
| | Caisson Diameter (in) | Caisson Depth (ft) | Vert Rebar Qty | Vert Rebar Size | Concrete Volume (Cu Yds) | Steel Weight (lbs) | Dia x Lgth x Hk | Bolt Circle Range (in) |
| RDWA-30-80B-104XP | 24 | 6.00 | 8 | #6 | 0.70 | 91 | 1 x 36 x 4 | 11 to 12.125 |
| RDWA-30-80V-104XP | 24 | 6.00 | 8 | #6 | 0.70 | 91 | 1 x 36 x 4 | 11 to 12.125 |
| RDWA-30-70B-106XP | 24 | 6.00 | 8 | #6 | 0.70 | 91 | 1 x 36 x 4 | 9.875 to 11.25 |
| RDWA-30-80B-106XP | 24 | 6.00 | 8 | #6 | 0.70 | 91 | 1 x 36 x 4 | 11 to 12.125 |
| RDWA-30-70B-108XP | 24 | 6.00 | 8 | #6 | 0.70 | 91 | 1 x 36 x 4 | 9.875 to 11.25 |
| RDWA-30-80B-108XP | 24 | 6.00 | 8 | #6 | 0.70 | 91 | 1 x 36 x 4 | 11 to 12.125 |
| RDWA-35-80B-104XP | 24 | 7.00 | 8 | #6 | 0.81 | 107 | 1 x 36 x 4 | 11 to 12.125 |
| RDWA-35-80V-104XP | 24 | 7.00 | 10 | #6 | 0.81 | 127 | 1 x 36 x 4 | 11 to 12.125 |
| RDWA-35-80H-104XP | 24 | 7.00 | 10 | #6 | 0.81 | 127 | 1 x 36 x 4 | 11 to 12.125 |
| RDWA-35-80B-106XP | 24 | 7.00 | 10 | #6 | 0.81 | 127 | 1 x 36 x 4 | 11 to 12.125 |
| RDWA-35-80V-106XP | 24 | 7.00 | 10 | #6 | 0.81 | 127 | 1 x 36 x 4 | 11 to 12.125 |
| RDWA-35-80H-106XP | 24 | 7.00 | 10 | #6 | 0.81 | 127 | 1 x 36 x 4 | 11 to 12.125 |
| RDWA-35-80B-108XP | 24 | 7.00 | 10 | #6 | 0.81 | 127 | 1 x 36 x 4 | 11 to 12.125 |
| RDWA-35-80V-108XP | 24 | 7.00 | 10 | #6 | 0.81 | 127 | 1 x 36 x 4 | 11 to 12.125 |
| RDWA-35-80H-108XP | 24 | 7.00 | 10 | #6 | 0.81 | 127 | 1 x 36 x 4 | 11 to 12.125 |
| RDWA-39-80V-104XP | 24 | 7.00 | 10 | #6 | 0.81 | 127 | 1 x 36 x 4 | 11 to 12.125 |
| RDWA-39-80H-104XP | 24 | 7.00 | 10 | #6 | 0.81 | 127 | 1 x 36 x 4 | 11 to 12.125 |
| RDWA-39-80V-106XP | 24 | 7.00 | 12 | #6 | 0.81 | 147 | 1 x 36 x 4 | 11 to 12.125 |
| RDWA-39-80H-106XP | 24 | 7.00 | 12 | #6 | 0.81 | 147 | 1 x 36 x 4 | 11 to 12.125 |
| RDWA-39-80V-108XP | 24 | 7.00 | 12 | #6 | 0.81 | 147 | 1 x 36 x 4 | 11 to 12.125 |
| RDWA-39-80H-108XP | 24 | 7.00 | 12 | #6 | 0.81 | 147 | 1 x 36 x 4 | 11 to 12.125 |

Notes:
1. The above information is for estimating purposes only. Do not use for construction.
2. Analysis is based upon Brom's method of foundation design.
3. All of the designs are based upon the following soil parameters:
   a. Soil is homogeneous, non-cohesive
   b. $\phi$ = 30 degrees
   c. $\gamma$ = 110 pcf.
   d. Water table is below bottom of foundation.
   e. Site grade is 7H:1V or flatter.
4. Concrete 28 day compressive strength = 3000 psi.
5. Reinforcing meets the requirements of ASTM A615 grade 60.
6. Concrete design is in accordance with ACI 318-95.
7. Concrete is cast against undisturbed soil.
8. All reinforcing must be covered by a minimum of 3" of concrete on all sides.
9. All vertical reinforcing bars are equally spaced.
10. #4 reinforcing bars are used as hoops and are spaced on 12" centers.

NOT FOR CONSTRUCTION.
FOR ESTIMATION ONLY.

MAVERICK®
POLES AND STRUCTURE, LLC.

# Roadway — 1PA-Series

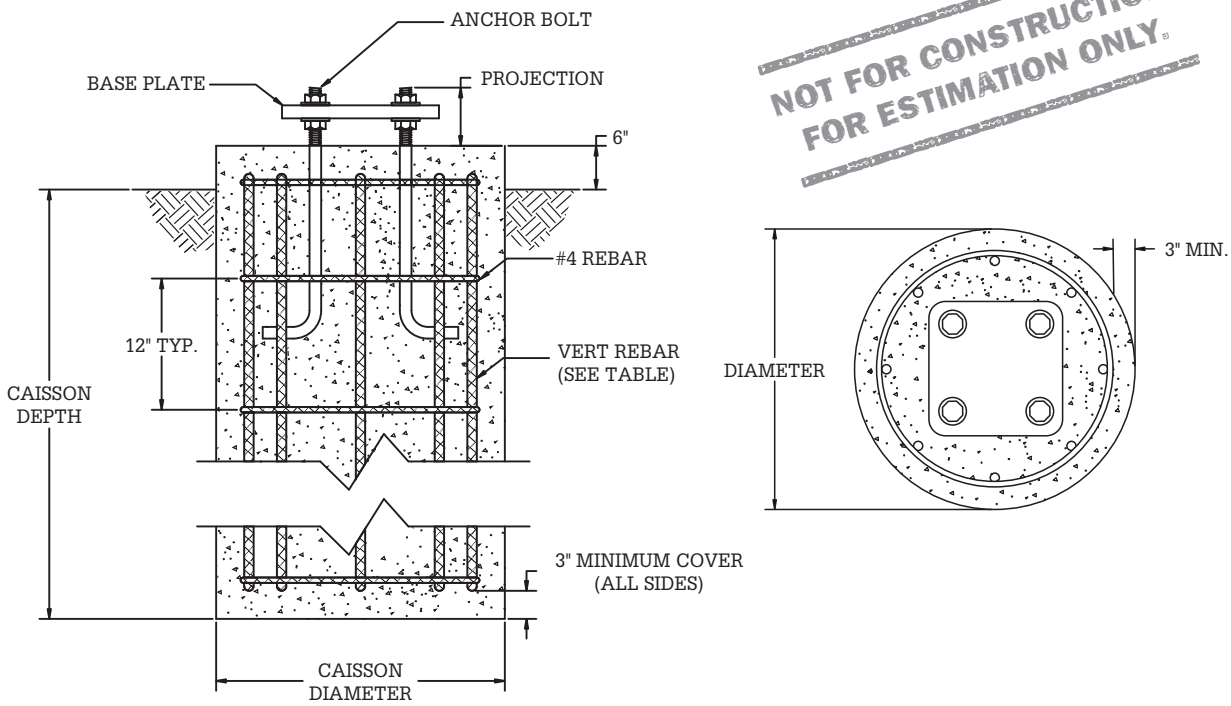


1. SEE TABLE FOR ACTUAL BOLT QUANTITY, BOLTS AND REBAR QUANTITIES SHOWN ARE FOR ILLUSTRATION PURPOSES ONLY.

*The information above is provided for preliminary estimating use only and may not be used as final or construction designs.*

MAVERICK®
POLES AND STRUCTURE, LLC.

# Roadway – 2PA-Series

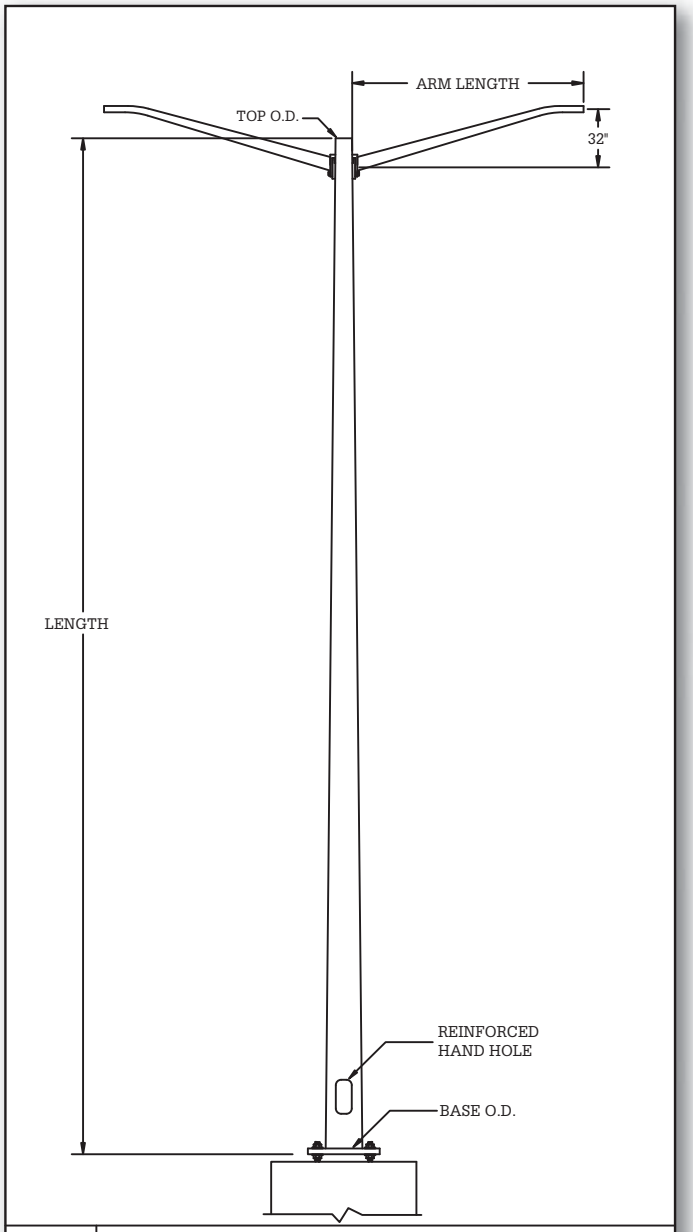


DETAIL | **POLE ASSEMBLY**

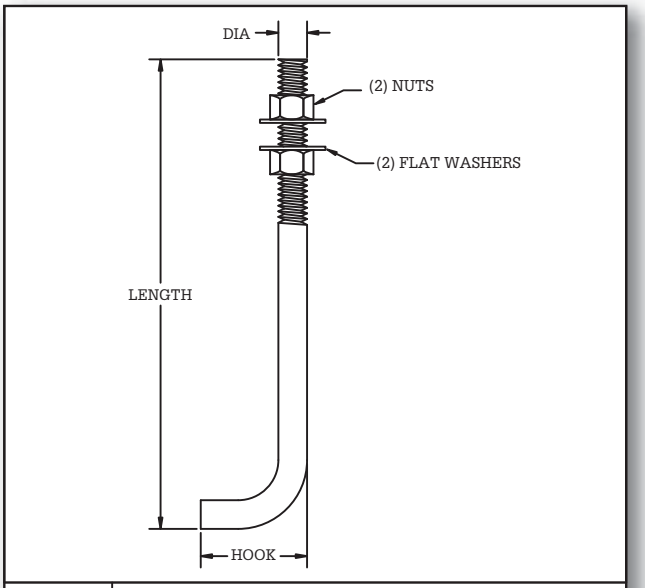


DETAIL 1 | **ANCHOR-BOLT**

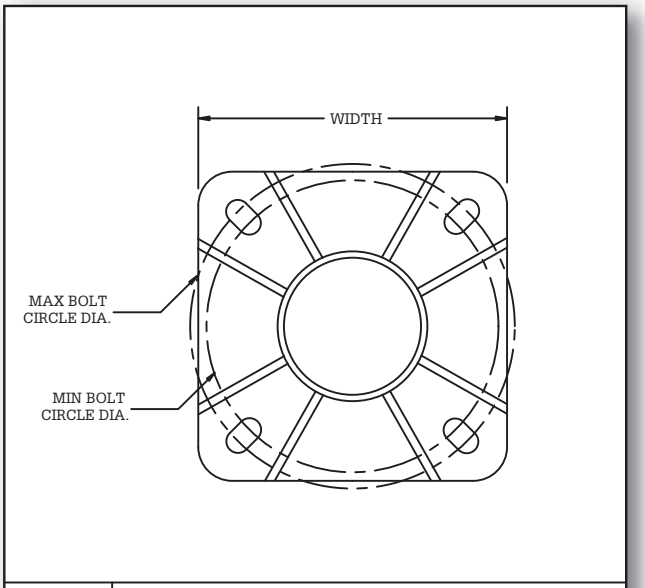


DETAIL 2 | **BASEPLATE**

MAVERICK®
POLES AND STRUCTURE, LLC.

# *Roadway – 2PA-Series*

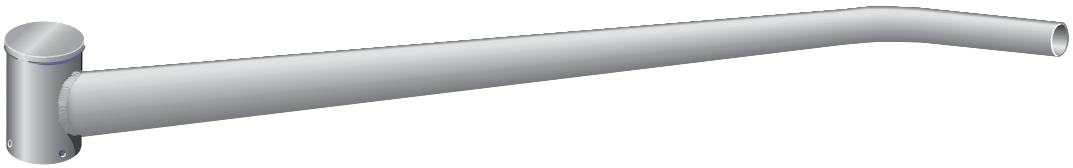

**Hub Mount**

**Bolt Mount**

**Simplex Mount**

**Clamp Mount**

**Note:** *For greater detail, only one side of the double arms is shown.*

# Roadway – 2PA-Series

## STRUCTURE DATA

| Catalog Number | Mounting Height (ft) | Gross Weight (Lbs) | Pole Shaft Data | | | | Arm | Base Plate Data | | Anchor Bolt Data |
|---|---|---|---|---|---|---|---|---|---|---|
| | | | Base O.D. (in) | Top O.D. (in) | Wall Thk. (in) | Shaft Length (ft) | Length (ft) | Bolt Circle Range (in) | Plate Square (in) | Dia x Lgth x Hk |
| RDWA-20-50V-204XP | 20 | 87 | 5.0 | 3.0 | 0.188 | 17.66 | 4 | 7.5 to 9.5 | 9.25 | 0.75 x 17 x 3 |
| RDWA-20-60B-204XP | 20 | 95 | 6.0 | 4.0 | 0.156 | 17.66 | 4 | 8.75 to 10.25 | 10.25 | 0.75 x 17 x 3 |
| RDWA-20-60V-204XP | 20 | 106 | 6.0 | 4.0 | 0.188 | 17.66 | 4 | 8.75 to 10.25 | 10.25 | 0.75 x 17 x 3 |
| RDWA-20-60B-206XP | 20 | 107 | 6.0 | 4.0 | 0.156 | 17.66 | 6 | 8.75 to 10.25 | 10.25 | 0.75 x 17 x 3 |
| RDWA-20-60V-206XP | 20 | 118 | 6.0 | 4.0 | 0.188 | 17.66 | 6 | 8.75 to 10.25 | 10.25 | 0.75 x 17 x 3 |
| RDWA-20-70B-206XP | 20 | 135 | 7.0 | 4.0 | 0.156 | 17.66 | 6 | 9.875 to 11.25 | 10.63 | 1 x 36 x 4 |
| RDWA-20-60B-208XP | 20 | 111 | 6.0 | 4.0 | 0.156 | 17.66 | 8 | 8.75 to 10.25 | 10.25 | 0.75 x 17 x 3 |
| RDWA-20-60V-208XP | 20 | 122 | 6.0 | 4.0 | 0.188 | 17.66 | 8 | 8.75 to 10.25 | 10.25 | 0.75 x 17 x 3 |
| RDWA-25-60B-204XP | 25 | 109 | 6.0 | 4.0 | 0.156 | 22.66 | 4 | 8.75 to 10.25 | 10.25 | 0.75 x 17 x 3 |
| RDWA-25-60V-204XP | 25 | 121 | 6.0 | 4.0 | 0.188 | 22.66 | 4 | 8.75 to 10.25 | 10.25 | 0.75 x 17 x 3 |
| RDWA-25-70B-204XP | 25 | 136 | 7.0 | 4.0 | 0.156 | 22.66 | 4 | 9.875 to 11.25 | 10.63 | 1 x 36 x 4 |
| RDWA-25-80B-204XP | 25 | 148 | 8.0 | 4.5 | 0.156 | 22.66 | 4 | 11 to 12.125 | 11.63 | 1 x 36 x 4 |
| RDWA-25-70B-206XP | 25 | 148 | 7.0 | 4.0 | 0.156 | 22.66 | 6 | 9.875 to 11.25 | 10.63 | 1 x 36 x 4 |
| RDWA-25-80B-206XP | 25 | 160 | 8.0 | 4.5 | 0.156 | 22.66 | 6 | 11 to 12.125 | 11.63 | 1 x 36 x 4 |
| RDWA-25-80V-206XP | 25 | 179 | 8.0 | 4.5 | 0.188 | 22.66 | 6 | 11 to 12.125 | 11.63 | 1 x 36 x 4 |
| RDWA-25-60V-208XP | 25 | 137 | 6.0 | 4.0 | 0.188 | 22.66 | 8 | 8.75 to 10.25 | 10.25 | 0.75 x 17 x 3 |
| RDWA-25-70B-208XP | 25 | 152 | 7.0 | 4.0 | 0.156 | 22.66 | 8 | 9.875 to 11.25 | 10.63 | 1 x 36 x 4 |
| RDWA-25-80B-208XP | 25 | 164 | 8.0 | 4.5 | 0.156 | 22.66 | 8 | 11 to 12.125 | 11.63 | 1 x 36 x 4 |
| RDWA-30-70B-204XP | 30 | 160 | 7.0 | 4.0 | 0.156 | 27.66 | 4 | 9.875 to 11.25 | 10.63 | 1 x 36 x 4 |
| RDWA-30-80B-204XP | 30 | 164 | 8.0 | 4.5 | 0.156 | 27.66 | 4 | 11 to 12.125 | 11.63 | 1 x 36 x 4 |
| RDWA-30-80V-204XP | 30 | 187 | 8.0 | 4.5 | 0.188 | 27.66 | 4 | 11 to 12.125 | 11.63 | 1 x 36 x 4 |
| RDWA-30-10V-204XP | 30 | 229 | 10.0 | 6.0 | 0.188 | 27.66 | 4 | 14.25 to 16.25 | 14.50 | 1 x 36 x 4 |
| RDWA-30-70B-206XP | 30 | 172 | 7.0 | 4.0 | 0.156 | 27.66 | 6 | 9.875 to 11.25 | 10.63 | 1 x 36 x 4 |
| RDWA-30-80B-206XP | 30 | 176 | 8.0 | 4.5 | 0.156 | 27.66 | 6 | 11 to 12.125 | 11.625 | 1 x 36 x 4 |
| RDWA-30-80V-206XP | 30 | 199 | 8.0 | 4.5 | 0.188 | 27.66 | 6 | 11 to 12.125 | 11.625 | 1 x 36 x 4 |
| RDWA-30-80H-206XP | 30 | 252 | 8.0 | 4.5 | 0.25 | 27.66 | 6 | 11 to 12.125 | 11.625 | 1 x 36 x 4 |
| RDWA-30-80B-208XP | 30 | 180 | 8.0 | 4.5 | 0.156 | 27.66 | 8 | 11 to 12.125 | 11.625 | 1 x 36 x 4 |
| RDWA-30-80V-208XP | 30 | 203 | 8.0 | 4.5 | 0.188 | 27.66 | 8 | 11 to 12.125 | 11.625 | 1 x 36 x 4 |
| RDWA-30-80H-208XP | 30 | 256 | 8.0 | 4.5 | 0.25 | 27.66 | 8 | 11 to 12.125 | 11.625 | 1 x 36 x 4 |
| RDWA-35-80B-204XP | 35 | 191 | 8.0 | 4.5 | 0.156 | 32.66 | 4 | 11 to 12.125 | 11.625 | 1 x 36 x 4 |
| RDWA-35-80V-204XP | 35 | 218 | 8.0 | 4.5 | 0.188 | 32.66 | 4 | 11 to 12.125 | 11.625 | 1 x 36 x 4 |
| RDWA-35-80H-204XP | 35 | 267 | 8.0 | 4.5 | 0.250 | 32.66 | 4 | 11 to 12.125 | 11.625 | 1 x 36 x 4 |
| RDWA-35-10V-204XP | 35 | 271 | 10.0 | 6.0 | 0.188 | 32.66 | 4 | 14.5 | 14.5 | 1 x 36 x 4 |
| RDWA-35-80V-206XP | 35 | 230 | 8.0 | 4.5 | 0.188 | 32.66 | 6 | 11 to 12.125 | 11.625 | 1 x 36 x 4 |
| RDWA-35-80H-206XP | 35 | 279 | 8.0 | 4.5 | 0.250 | 32.66 | 6 | 11 to 12.125 | 11.625 | 1 x 36 x 4 |
| RDWA-35-10V-206XP | 35 | 283 | 10.0 | 6.0 | 0.188 | 32.66 | 6 | 14.5 | 14.5 | 1 x 36 x 4 |
| RDWA-35-80V-208XP | 35 | 234 | 8.0 | 4.5 | 0.188 | 32.66 | 8 | 11 to 12.125 | 11.625 | 1 x 36 x 4 |
| RDWA-35-80H-208XP | 35 | 283 | 8.0 | 4.5 | 0.250 | 32.66 | 8 | 11 to 12.125 | 11.625 | 1 x 36 x 4 |
| RDWA-35-10V-208XP | 35 | 287 | 10.0 | 6.0 | 0.188 | 32.66 | 8 | 14.5 | 14.5 | 1 x 36 x 4 |
| RDWA-39-80V-204XP | 39 | 240 | 8.0 | 4.5 | 0.188 | 36.66 | 4 | 11 to 12.125 | 11.625 | 1 x 36 x 4 |
| RDWA-39-80H-204XP | 39 | 302 | 8.0 | 4.5 | 0.250 | 36.66 | 4 | 11 to 12.125 | 11.625 | 1 x 36 x 4 |
| RDWA-39-80V-206XP | 39 | 252 | 8.0 | 4.5 | 0.188 | 36.66 | 6 | 11 to 12.125 | 11.625 | 1 x 36 x 4 |
| RDWA-39-80H-206XP | 39 | 314 | 8.0 | 4.5 | 0.250 | 36.66 | 6 | 11 to 12.125 | 11.625 | 1 x 36 x 4 |
| RDWA-39-10V-206XP | 39 | 297 | 10.0 | 6.0 | 0.188 | 36.66 | 6 | 14.5 | 14.5 | 1 x 36 x 4 |
| RDWA-39-10H-206XP | 39 | 413 | 10.0 | 6.0 | 0.250 | 36.66 | 6 | 14.5 | 14.5 | 1.25 x 42 x 6 |
| RDWA-39-80H-208XP | 39 | 318 | 8.0 | 4.5 | 0.250 | 36.66 | 8 | 11 to 12.125 | 11.625 | 1 x 36 x 4 |
| RDWA-39-10V-208XP | 39 | 301 | 10.0 | 6.0 | 0.188 | 36.66 | 8 | 14.5 | 14.5 | 1 x 36 x 4 |
| RDWA-39-10H-208XP | 39 | 417 | 10.0 | 6.0 | 0.250 | 36.66 | 8 | 14.5 | 14.5 | 1.25 x 42 x 6 |

**Replace "X" with the Following:**

H - Hub-mounted
B - Bolt-mounted
S - Simplex-mounted
C - Clamp-mounted

* Hub-mounted only

MAVERICK® POLES AND STRUCTURE, LLC.

# Roadway – 2PA-Series

## STRUCTURE LOADING CAPACITIES

| Catalog Number | Maximum Loading | | | | | | | | | |
|---|---|---|---|---|---|---|---|---|---|---|
| | 70 mph | | 80 mph | | 90 mph | | 100 mph | | 110 mph | |
| | EPA (ft2) | Wt. (lbs) | EPA (ft2) | Wt. (lbs) | EPA (ft2) | Wt. (lbs) | EPA (ft2) | Wt. (lbs) | EPA (ft2) | Wt. (lbs) |
| RDWA-20-50V-204XP | 4.2 | 105 | 2.5 | 63 | 1.3 | 33 | --- | --- | --- | --- |
| RDWA-20-60B-204XP | 5.9 | 148 | 3.8 | 95 | 2.5 | 63 | 1.5 | 38 | 0.8 | 20 |
| RDWA-20-60V-204XP | 7.1 | 178 | 5.3 | 133 | 3.5 | 88 | 2.4 | 60 | 1.5 | 38 |
| RDWA-20-60B-206XP | 5.3 | 133 | 3.3 | 83 | 1.9 | 48 | 0.9 | 23 | --- | --- |
| RDWA-20-60V-206XP | 7.1 | 178 | 4.7 | 118 | 3.1 | 78 | 1.9 | 48 | 1.2 | 30 |
| RDWA-20-70B-206XP | 7.1 | 178 | 5.5 | 138 | 4.1 | 103 | 2.8 | 70 | 1.9 | 48 |
| RDWA-20-60B-208XP | 4.2 | 105 | 2.2 | 55 | 0.8 | 20 | --- | --- | --- | --- |
| RDWA-20-60V-208XP | 5.3 | 133 | 3.8 | 95 | 2.0 | 50 | 0.8 | 20 | --- | --- |
| RDWA-25-60B-204XP | 3.1 | 78 | 1.4 | 35 | --- | --- | --- | --- | --- | --- |
| RDWA-25-60V-204XP | 4.5 | 113 | 2.6 | 65 | 1.3 | 33 | 0.6 | 15 | --- | --- |
| RDWA-25-70B-204XP | 6.0 | 150 | 3.8 | 95 | 2.4 | 60 | 1.3 | 33 | 0.7 | 18 |
| RDWA-25-80B-204XP | 7.1 | 178 | 6.4 | 160 | 4.5 | 113 | 3.1 | 78 | 2.1 | 53 |
| RDWA-25-70B-206XP | 5.4 | 135 | 3.2 | 80 | 1.8 | 45 | 0.8 | 20 | --- | --- |
| RDWA-25-80B-206XP | 7.1 | 178 | 5.5 | 138 | 3.9 | 98 | 2.6 | 65 | 1.5 | 38 |
| RDWA-25-80V-206XP | 7.1 | 178 | 5.5 | 138 | 4.2 | 105 | 3.3 | 83 | 2.7 | 68 |
| RDWA-25-60V-208XP | 2.9 | 73 | 1.1 | 28 | --- | --- | --- | --- | --- | --- |
| RDWA-25-70B-208XP | 4.4 | 110 | 2.1 | 53 | 0.7 | 18 | --- | --- | --- | --- |
| RDWA-25-80B-208XP | 5.3 | 133 | 3.8 | 95 | 2.8 | 70 | 1.5 | 38 | 0.6 | 15 |
| RDWA-30-70B-204XP | 3.3 | 83 | 1.5 | 38 | --- | --- | --- | --- | --- | --- |
| RDWA-30-80B-204XP | 6.0 | 150 | 3.8 | 95 | 2.4 | 60 | 1.3 | 33 | 0.6 | 15 |
| RDWA-30-80V-204XP | 7.1 | 178 | 5.4 | 135 | 3.6 | 90 | 2.5 | 63 | 1.5 | 38 |
| RDWA-30-10V-204XP | 7.1 | 178 | 7.1 | 178 | 6.2 | 155 | 4.9 | 123 | 4.1 | 103 |
| RDWA-30-70B-206XP | 2.7 | 68 | 1.2 | 30 | --- | --- | --- | --- | --- | --- |
| RDWA-30-80B-206XP | 5.4 | 135 | 3.2 | 80 | 1.8 | 45 | 0.8 | 20 | --- | --- |
| RDWA-30-80V-206XP | 7.1 | 178 | 4.9 | 123 | 3.2 | 80 | 1.9 | 48 | 1.1 | 28 |
| RDWA-30-80H-206XP | 7.1 | 178 | 5.5 | 138 | 4.2 | 105 | 3.3 | 83 | 2.6 | 65 |
| RDWA-30-80B-208XP | 4.4 | 110 | 2.1 | 53 | 0.8 | 20 | --- | --- | --- | --- |
| RDWA-30-80V-208XP | 5.3 | 133 | 3.8 | 95 | 2.1 | 53 | 0.9 | 23 | --- | --- |
| RDWA-30-80H-208XP | 5.3 | 133 | 3.8 | 95 | 2.8 | 70 | 2.0 | 50 | 1.5 | 38 |
| RDWA-35-80B-204XP | 3.4 | 85 | 1.6 | 40 | 0.7 | 18 | --- | --- | --- | --- |
| RDWA-35-80V-204XP | 5.3 | 133 | 3.1 | 78 | 1.8 | 45 | 0.8 | 20 | --- | --- |
| RDWA-35-80H-204XP | 7.1 | 178 | 5.8 | 145 | 3.9 | 98 | 2.6 | 65 | 1.6 | 40 |
| RDWA-35-10V-204XP | 7.1 | 178 | 7.1 | 178 | 6.1 | 153 | 4.2 | 105 | 2.9 | 73 |
| RDWA-35-80V-206XP | 4.7 | 118 | 2.6 | 65 | 1.3 | 33 | --- | --- | --- | --- |
| RDWA-35-80H-206XP | 7.1 | 178 | 5.3 | 133 | 3.4 | 85 | 2.1 | 53 | 1.1 | 28 |
| RDWA-35-10V-206XP | 7.1 | 178 | 5.5 | 138 | 4.2 | 105 | 3.3 | 83 | 2.4 | 60 |
| RDWA-35-80V-208XP | 3.6 | 90 | 1.5 | 38 | --- | --- | --- | --- | --- | --- |
| RDWA-35-80H-208XP | 5.3 | 133 | 3.8 | 95 | 2.4 | 60 | 1.1 | 28 | --- | --- |
| RDWA-35-10V-208XP | 5.3 | 133 | 3.8 | 95 | 2.8 | 70 | 2.0 | 50 | 1.3 | 33 |
| RDWA-39-80V-204XP | 3.4 | 85 | 1.6 | 40 | 0.6 | 15 | --- | --- | --- | --- |
| RDWA-39-80H-204XP | 6.5 | 163 | 4.0 | 100 | 2.5 | 63 | 1.4 | 35 | 0.6 | 15 |
| RDWA-39-80V-206XP | 2.8 | 70 | 1.2 | 30 | --- | --- | --- | --- | --- | --- |
| RDWA-39-80H-206XP | 5.9 | 148 | 3.4 | 85 | 1.9 | 48 | 0.8 | 20 | --- | --- |
| RDWA-39-10V-206XP | 7.1 | 178 | 5.5 | 138 | 3.9 | 98 | 2.4 | 60 | 1.2 | 30 |
| RDWA-39-10H-206XP | 7.1 | 178 | 5.5 | 138 | 4.2 | 105 | 3.3 | 83 | 2.7 | 68 |
| RDWA-39-80H-208XP | 4.8 | 120 | 2.4 | 60 | 0.9 | 23 | --- | --- | --- | --- |
| RDWA-39-10V-208XP | 5.3 | 133 | 3.8 | 95 | 2.8 | 70 | 1.3 | 33 | --- | --- |
| RDWA-39-10H-208XP | 5.3 | 133 | 3.8 | 95 | 2.8 | 70 | 2.0 | 50 | 1.5 | 38 |

**Replace "X" with the Following:**
H - Hub-mounted
B - Bolt-mounted
S - Simplex-mounted
C - Clamp-mounted

MAVERICK®
POLES AND STRUCTURE, LLC.

# Roadway — 2PA-Series (20' to 25')

## FOUNDATIONS (20 to 25') RDWA-2PA

| Catalog Number | Foundation Data | | | | | | Anchor Bolt Data | |
|---|---|---|---|---|---|---|---|---|
| | Caisson Diameter (in) | Caisson Depth (ft) | Vert Rebar Qty | Vert Rebar Size | Concrete Volume (Cu Yds) | Steel Weight (lbs) | Dia x Lgth x Hk | Bolt Circle Range (in) |
| RDWA-20-50V-204XP | 24 | 6.00 | 8 | #6 | 0.70 | 91 | 0.75 x 17 x 3 | 7.5 to 9.5 |
| RDWA-20-60B-204XP | 24 | 6.00 | 8 | #6 | 0.70 | 91 | 0.75 x 17 x 3 | 8.75 to 10.25 |
| RDWA-20-60V-204XP | 24 | 6.00 | 8 | #6 | 0.70 | 91 | 0.75 x 17 x 3 | 8.75 to 10.25 |
| RDWA-20-60B-206XP | 24 | 6.00 | 8 | #6 | 0.70 | 91 | 0.75 x 17 x 3 | 8.75 to 10.25 |
| RDWA-20-60V-206XP | 24 | 6.00 | 8 | #6 | 0.70 | 91 | 0.75 x 17 x 3 | 8.75 to 10.25 |
| RDWA-20-70B-206XP | 24 | 6.00 | 8 | #6 | 0.70 | 91 | 1 x 36 x 4 | 9.875 to 11.25 |
| RDWA-20-60B-208XP | 24 | 6.00 | 8 | #6 | 0.70 | 91 | 0.75 x 17 x 3 | 8.75 to 10.25 |
| RDWA-20-60V-208XP | 24 | 6.00 | 8 | #6 | 0.70 | 91 | 0.75 x 17 x 3 | 8.75 to 10.25 |
| RDWA-25-60B-204XP | 24 | 6.00 | 8 | #6 | 0.70 | 91 | 0.75 x 17 x 3 | 8.75 to 10.25 |
| RDWA-25-60V-204XP | 24 | 6.00 | 8 | #6 | 0.70 | 91 | 0.75 x 17 x 3 | 8.75 to 10.25 |
| RDWA-25-70B-204XP | 24 | 6.00 | 8 | #6 | 0.70 | 91 | 1 x 36 x 4 | 9.875 to 11.25 |
| RDWA-25-80B-204XP | 24 | 6.00 | 8 | #6 | 0.70 | 91 | 1 x 36 x 4 | 11 to 12.125 |
| RDWA-25-70B-206XP | 24 | 6.00 | 8 | #6 | 0.70 | 91 | 1 x 36 x 4 | 9.875 to 11.25 |
| RDWA-25-80B-206XP | 24 | 6.00 | 8 | #6 | 0.70 | 91 | 1 x 36 x 4 | 11 to 12.125 |
| RDWA-25-80V-206XP | 24 | 6.00 | 8 | #6 | 0.70 | 91 | 1 x 36 x 4 | 11 to 12.125 |
| RDWA-25-60V-208XP | 24 | 6.00 | 8 | #6 | 0.70 | 91 | 0.75 x 17 x 3 | 8.75 to 10.25 |
| RDWA-25-70B-208XP | 24 | 6.00 | 8 | #6 | 0.70 | 91 | 1 x 36 x 4 | 9.875 to 11.25 |
| RDWA-25-80B-208XP | 24 | 6.00 | 8 | #6 | 0.70 | 91 | 1 x 36 x 4 | 11 to 12.125 |

**Notes:**

1. The above information is for estimating purposes only. Do not use for construction.
2. Analysis is based upon Brom's method of foundation design.
3. All of the designs are based upon the following soil parameters:
   a. Soil is homogeneous, non-cohesive
   b. $\phi$ = 30 degrees
   c. $\gamma$ = 110 pcf.
   d. Water table is below bottom of foundation.
   e. Site grade is 7H:1V or flatter.
4. Concrete 28 day compressive strength = 3000 psi.
5. Reinforcing meets the requirements of ASTM A615 grade 60.
6. Concrete design is in accordance with ACI 318-95.
7. Concrete is cast against undisturbed soil.
8. All reinforcing must be covered by a minimum of 3" of concrete on all sides.
9. All vertical reinforcing bars are equally spaced.
10. #4 reinforcing bars are used as hoops and are spaced on 12" centers.

NOT FOR CONSTRUCTION.
FOR ESTIMATION ONLY.

*The information above is provided for preliminary estimating use only and may not be used as final or construction designs.*

MAVERICK®
POLES AND STRUCTURE, LLC.

# Roadway — 2PA-Series (30' to 39')

## FOUNDATIONS (30' to 39') RDWA-2PA

| Catalog Number | Foundation Data | | | | | | Anchor Bolt Data | |
|---|---|---|---|---|---|---|---|---|
| | Caisson Diameter (in) | Caisson Depth (ft) | Vert Rebar Qty | Vert Rebar Size | Concrete Volume (Cu Yds) | Steel Weight (lbs) | Dia x Lgth x Hk | Bolt Circle Range (in) |
| RDWA-30-80B-204XP | 24 | 7.00 | 8 | #6 | 0.81 | 107 | 1 x 36 x 4 | 11 to 12.125 |
| RDWA-30-80V-204XP | 24 | 7.00 | 8 | #6 | 0.81 | 107 | 1 x 36 x 4 | 11 to 12.125 |
| RDWA-30-10V-204XP | 24 | 7.00 | 8 | #6 | 0.81 | 107 | 1 x 36 x 4 | 14.50 |
| RDWA-30-70B-206XP | 24 | 7.00 | 8 | #6 | 0.81 | 107 | 1 x 36 x 4 | 9.875 to 11.25 |
| RDWA-30-80B-206XP | 24 | 7.00 | 8 | #6 | 0.81 | 107 | 1 x 36 x 4 | 11 to 12.125 |
| RDWA-30-80V-206XP | 24 | 7.00 | 8 | #6 | 0.81 | 107 | 1 x 36 x 4 | 11 to 12.125 |
| RDWA-30-80H-206XP | 24 | 7.00 | 8 | #6 | 0.81 | 107 | 1 x 36 x 4 | 11 to 12.125 |
| RDWA-30-80B-208XP | 24 | 7.00 | 8 | #6 | 0.81 | 107 | 1 x 36 x 4 | 11 to 12.125 |
| RDWA-30-80V-208XP | 24 | 7.00 | 8 | #6 | 0.81 | 107 | 1 x 36 x 4 | 11 to 12.125 |
| RDWA-30-80H-208XP | 24 | 7.00 | 8 | #6 | 0.81 | 107 | 1 x 36 x 4 | 11 to 12.125 |
| RDWA-35-80B-204XP | 24 | 8.00 | 8 | #6 | 0.93 | 124 | 1 x 36 x 4 | 11 to 12.125 |
| RDWA-35-80V-204XP | 24 | 8.00 | 10 | #6 | 0.93 | 146 | 1 x 36 x 4 | 11 to 12.125 |
| RDWA-35-80H-204XP | 24 | 8.00 | 10 | #6 | 0.93 | 146 | 1 x 36 x 4 | 11 to 12.125 |
| RDWA-35-10V-204XP | 30 | 8.00 | 10 | #6 | 1.45 | 155 | 1 x 36 x 4 | 14.5 |
| RDWA-35-80V-206XP | 24 | 8.00 | 10 | #6 | 0.93 | 146 | 1 x 36 x 4 | 11 to 12.125 |
| RDWA-35-80H-206XP | 24 | 8.00 | 10 | #6 | 0.93 | 146 | 1 x 36 x 4 | 11 to 12.125 |
| RDWA-35-10V-206XP | 30 | 8.00 | 10 | #6 | 1.45 | 155 | 1 x 36 x 4 | 14.5 |
| RDWA-35-80V-208XP | 24 | 8.00 | 10 | #6 | 0.93 | 146 | 1 x 36 x 4 | 11 to 12.125 |
| RDWA-35-80H-208XP | 24 | 8.00 | 10 | #6 | 0.93 | 146 | 1 x 36 x 4 | 11 to 12.125 |
| RDWA-35-10V-208XP | 30 | 8.00 | 10 | #6 | 1.45 | 155 | 1 x 36 x 4 | 14.5 |
| RDWA-39-80V-204XP | 24 | 8.00 | 10 | #6 | 0.93 | 146 | 1 x 36 x 4 | 11 to 12.125 |
| RDWA-39-80H-204XP | 24 | 8.00 | 10 | #6 | 0.93 | 146 | 1 x 36 x 4 | 11 to 12.125 |
| RDWA-39-80V-206XP | 24 | 8.00 | 10 | #6 | 0.93 | 146 | 1 x 36 x 4 | 11 to 12.125 |
| RDWA-39-80H-206XP | 24 | 8.00 | 12 | #6 | 0.93 | 169 | 1 x 36 x 4 | 11 to 12.125 |
| RDWA-39-10V-206XP | 30 | 8.00 | 12 | #6 | 1.45 | 177 | 1 x 36 x 4 | 14.5 |
| RDWA-39-10H-206XP | 30 | 8.00 | 12 | #6 | 1.45 | 177 | 1.25 x 42 x 6 | 14.5 |
| RDWA-39-80H-208XP | 24 | 8.00 | 12 | #6 | 0.93 | 169 | 1 x 36 x 4 | 11 to 12.125 |
| RDWA-39-10V-208XP | 30 | 8.00 | 12 | #6 | 1.45 | 177 | 1 x 36 x 4 | 14.5 |
| RDWA-39-10H-208XP | 30 | 8.00 | 12 | #6 | 1.45 | 177 | 1.25 x 42 x 6 | 14.5 |

Notes:

1. The above information is for estimating purposes only. Do not use for construction.
2. Analysis is based upon Brom's method of foundation design.
3. All of the designs are based upon the following soil parameters:
   a. Soil is homogeneous, non-cohesive
   b. $\phi$ = 30 degrees
   c. $\gamma$ = 110 pcf.
   d. Water table is below bottom of foundation.
   e. Site grade is 7H:1V or flatter.
4. Concrete 28 day compressive strength = 3000 psi.
5. Reinforcing meets the requirements of ASTM A615 grade 60.
6. Concrete design is in accordance with ACI 318-95.
7. Concrete is cast against undisturbed soil.
8. All reinforcing must be covered by a minimum of 3" of concrete on all sides.
9. All vertical reinforcing bars are equally spaced.
10. #4 reinforcing bars are used as hoops and are spaced on 12" centers.

NOT FOR CONSTRUCTION.
FOR ESTIMATION ONLY.

*The information above is provided for preliminary estimating use only and may not be used as final or construction designs.*

MAVERICK®
POLES AND STRUCTURE, LLC.

# Roadway — 2PA-Series

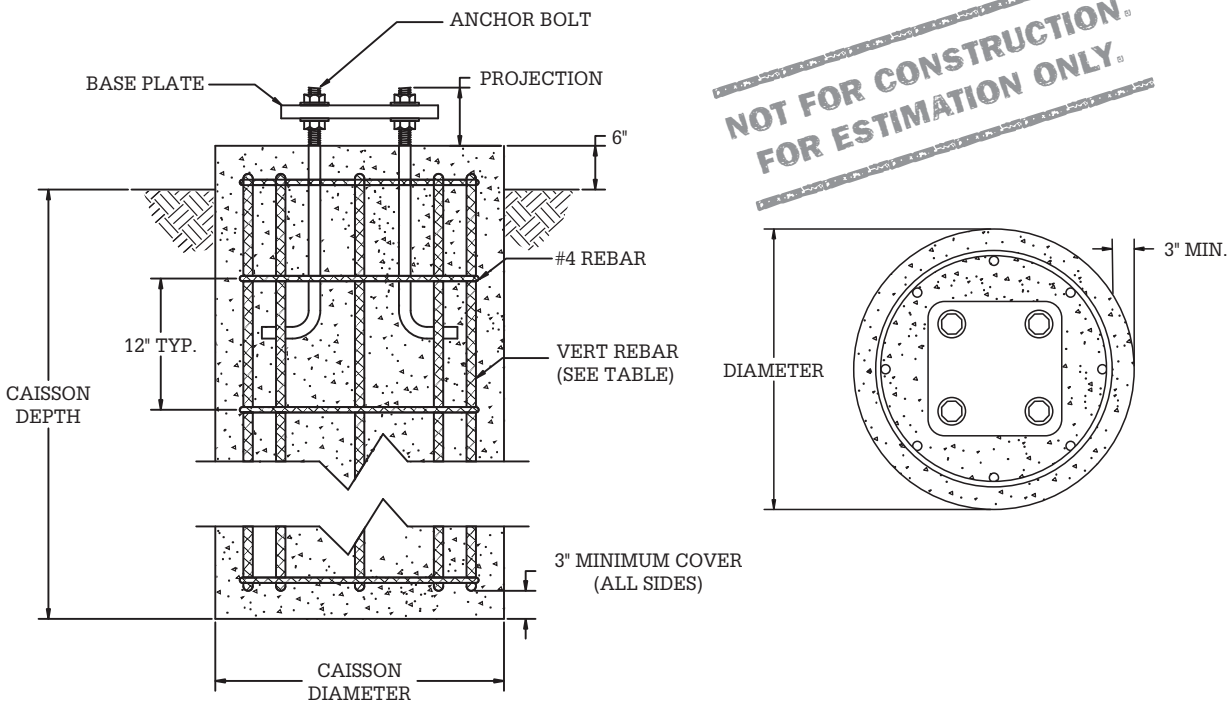


1. SEE TABLE FOR ACTUAL BOLT QUANTITY, BOLTS AND REBAR QUANTITIES SHOWN ARE FOR ILLUSTRATION PURPOSES ONLY.

*The information above is provided for preliminary estimating use only and may not be used as final or construction designs.*

MAVERICK®
POLES AND STRUCTURE, LLC.

# Roadway – 1TA-Series

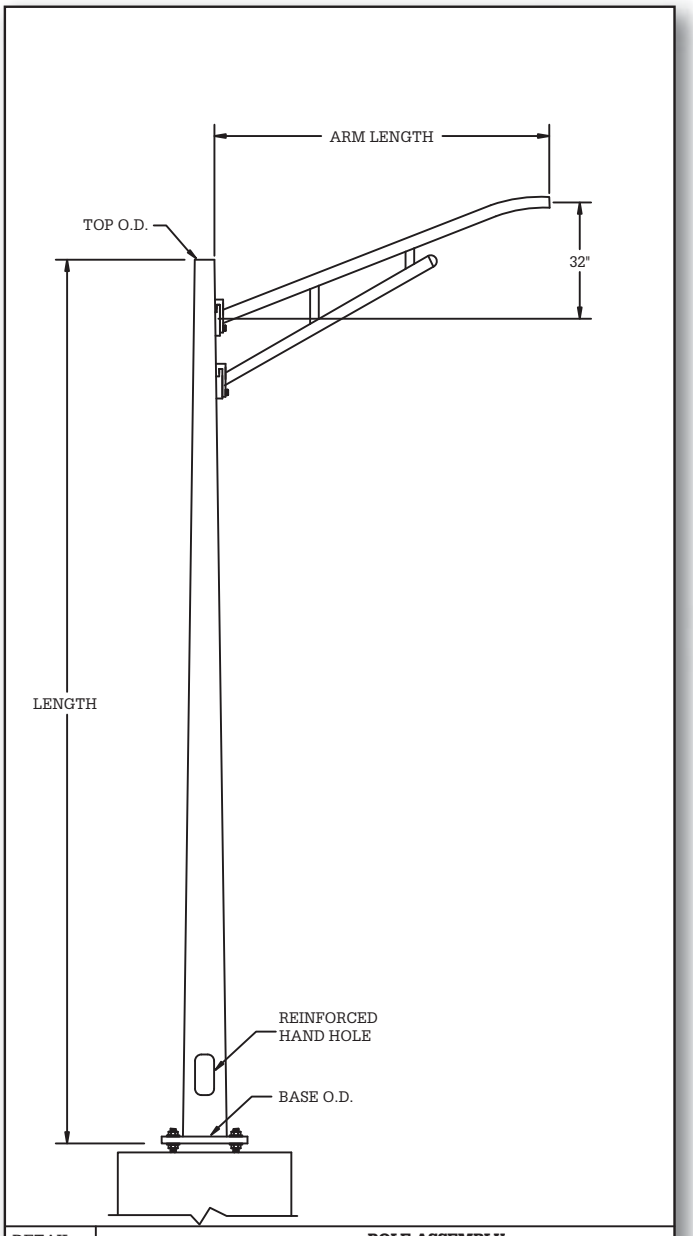


DETAIL | **POLE ASSEMBLY**

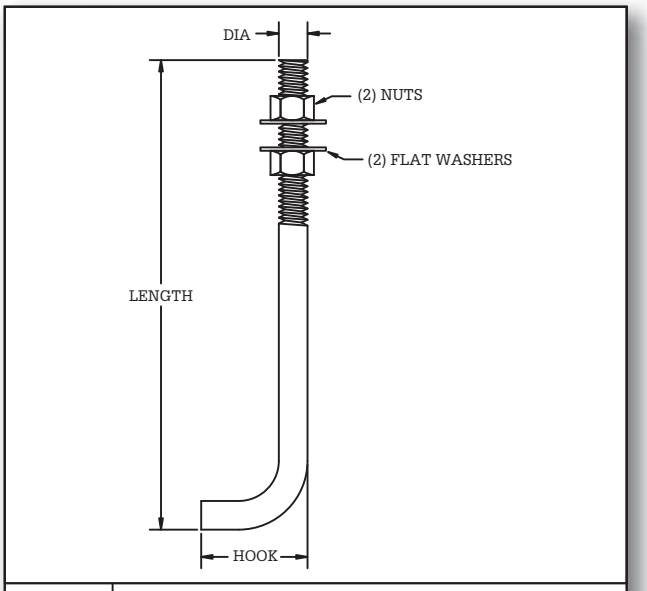


DETAIL 1 | ***ANCHOR-BOLT***

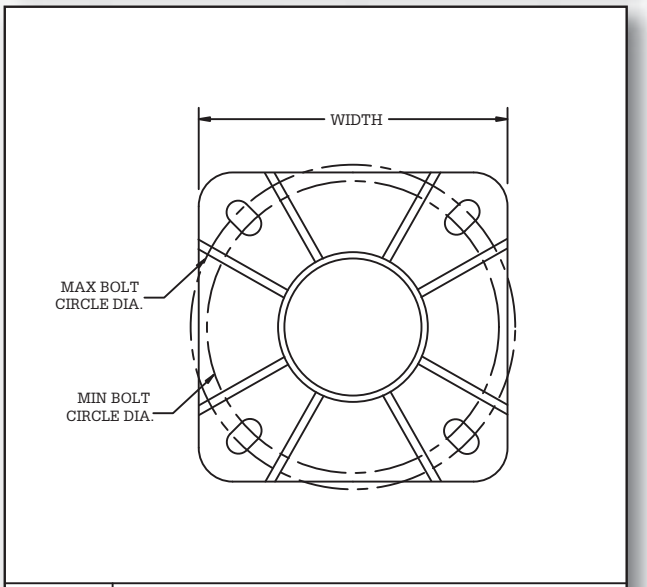


DETAIL 2 | **BASEPLATE**

MAVERICK®
POLES AND STRUCTURE, LLC.

# *Roadway – 1TA-Series*

**Single Truss Arm**

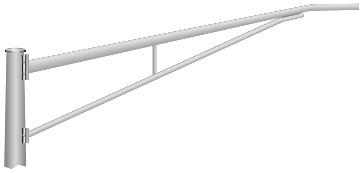

**Bolt-mounted**

**Clamp-mounted**

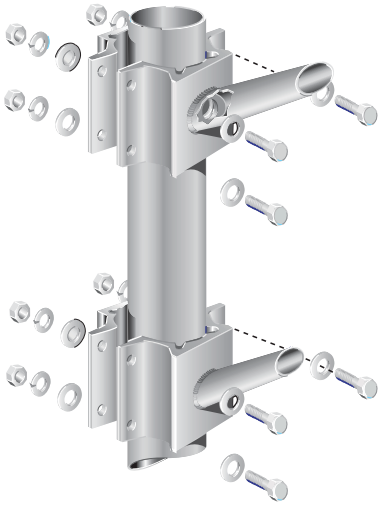

MAVERICK®
POLES AND STRUCTURE, LLC.

# Roadway – 1TA-Series

## STRUCTURE DATA

| Catalog Number | Mounting Height (ft) | Gross Weight (Lbs) | Pole Shaft Data | | | | Arm | Base Plate Data | | Anchor Bolt Data |
|---|---|---|---|---|---|---|---|---|---|---|
| | | | Base O.D. (in) | Top O.D. (in) | Wall Thk. (in) | Shaft Length (ft) | Length (ft) | Bolt Circle Range (in) | Plate Square (in) | Dia x Lgth x Hk |
| RDWA-20-50B-104XP | 20 | 74 | 5.0 | 3.0 | 0.156 | 17.66 | 4 | 7.5 to 9.5 | 9.25 | 0.75 x 17 x 3 |
| RDWA-20-50V-104XP | 20 | 84 | 5.0 | 3.0 | 0.188 | 17.66 | 4 | 7.5 to 9.5 | 9.25 | 0.75 x 17 x 3 |
| RDWA-20-60B-104XP | 20 | 92 | 6.0 | 4.0 | 0.156 | 17.66 | 4 | 8.75 to 10.25 | 10.25 | 0.75 x 17 x 3 |
| RDWA-20-60V-104XP | 20 | 103 | 6.0 | 4.0 | 0.188 | 17.66 | 4 | 8.75 to 10.25 | 10.25 | 0.75 x 17 x 3 |
| RDWA-20-50B-106XP | 20 | 77 | 5.0 | 3.0 | 0.156 | 17.66 | 6 | 7.5 to 9.5 | 9.25 | 0.75 x 17 x 3 |
| RDWA-20-50V-106XP | 20 | 87 | 5.0 | 3.0 | 0.188 | 17.66 | 6 | 7.5 to 9.5 | 9.25 | 0.75 x 17 x 3 |
| RDWA-20-60B-106XP | 20 | 95 | 6.0 | 4.0 | 0.156 | 17.66 | 6 | 8.75 to 10.25 | 10.25 | 0.75 x 17 x 3 |
| RDWA-20-60B-108XP | 20 | 97 | 6.0 | 4.0 | 0.156 | 17.66 | 8 | 8.75 to 10.25 | 10.25 | 0.75 x 17 x 3 |
| RDWA-25-60B-104XP | 25 | 106 | 6.0 | 4.0 | 0.156 | 22.66 | 4 | 8.75 to 10.25 | 10.25 | 0.75 x 17 x 3 |
| RDWA-25-60V-104XP | 25 | 118 | 6.0 | 4.0 | 0.188 | 22.66 | 4 | 8.75 to 10.25 | 10.25 | 0.75 x 17 x 3 |
| RDWA-25-70B-104XP | 25 | 133 | 7.0 | 4.0 | 0.156 | 22.66 | 4 | 9.875 to 11.25 | 10.63 | 1 x 36 x 4 |
| RDWA-25-60B-106XP | 25 | 109 | 6.0 | 4.0 | 0.156 | 22.66 | 6 | 8.75 to 10.25 | 10.25 | 0.75 x 17 x 3 |
| RDWA-25-60V-106XP | 25 | 121 | 6.0 | 4.0 | 0.188 | 22.66 | 6 | 8.75 to 10.25 | 10.25 | 0.75 x 17 x 3 |
| RDWA-25-70B-106XP | 25 | 136 | 7.0 | 4.0 | 0.156 | 22.66 | 6 | 9.875 to 11.25 | 10.63 | 1 x 36 x 4 |
| RDWA-25-60B-108XP | 25 | 111 | 6.0 | 4.0 | 0.156 | 22.66 | 8 | 8.75 to 10.25 | 10.25 | 0.75 x 17 x 3 |
| RDWA-25-60V-108XP | 25 | 123 | 6.0 | 4.0 | 0.188 | 22.66 | 8 | 8.75 to 10.25 | 10.25 | 0.75 x 17 x 3 |
| RDWA-25-70B-108XP | 25 | 138 | 7.0 | 4.0 | 0.156 | 22.66 | 8 | 9.875 to 11.25 | 10.63 | 1 x 36 x 4 |
| RDWA-30-70B-104XP | 30 | 157 | 7.0 | 4.0 | 0.156 | 27.66 | 4 | 9.875 to 11.25 | 10.63 | 1 x 36 x 4 |
| RDWA-30-80B-104XP | 30 | 161 | 8.0 | 4.5 | 0.156 | 27.66 | 4 | 11 to 12.125 | 11.63 | 1 x 36 x 4 |
| RDWA-30-80V-104XP | 30 | 184 | 8.0 | 4.5 | 0.188 | 27.66 | 4 | 11 to 12.125 | 11.63 | 1 x 36 x 4 |
| RDWA-30-70B-106XP | 30 | 160 | 7.0 | 4.0 | 0.156 | 27.66 | 6 | 9.875 to 11.25 | 10.63 | 1 x 36 x 4 |
| RDWA-30-80B-106XP | 30 | 164 | 8.0 | 4.5 | 0.156 | 27.66 | 6 | 11 to 12.125 | 11.625 | 1 x 36 x 4 |
| RDWA-30-70B-108XP | 30 | 162 | 7.0 | 4.0 | 0.156 | 27.66 | 8 | 9.875 to 11.25 | 10.625 | 1 x 36 x 4 |
| RDWA-30-80B-108XP | 30 | 166 | 8.0 | 4.5 | 0.156 | 27.66 | 8 | 11 to 12.125 | 11.625 | 1 x 36 x 4 |
| RDWA-35-80B-104XP | 35 | 188 | 8.0 | 4.5 | 0.156 | 32.66 | 4 | 11 to 12.125 | 11.625 | 1 x 36 x 4 |
| RDWA-35-80V-104XP | 35 | 215 | 8.0 | 4.5 | 0.188 | 32.66 | 4 | 11 to 12.125 | 11.625 | 1 x 36 x 4 |
| RDWA-35-80H-104XP | 35 | 264 | 8.0 | 4.5 | 0.250 | 32.66 | 4 | 11 to 12.125 | 11.625 | 1 x 36 x 4 |
| RDWA-35-80B-106XP | 35 | 191 | 8.0 | 4.5 | 0.156 | 32.66 | 6 | 11 to 12.125 | 11.625 | 1 x 36 x 4 |
| RDWA-35-80V-106XP | 35 | 218 | 8.0 | 4.5 | 0.188 | 32.66 | 6 | 11 to 12.125 | 11.625 | 1 x 36 x 4 |
| RDWA-35-80H-106XP | 35 | 267 | 8.0 | 4.5 | 0.250 | 32.66 | 6 | 11 to 12.125 | 11.625 | 1 x 36 x 4 |
| RDWA-35-80B-108XP | 35 | 193 | 8.0 | 4.5 | 0.156 | 32.66 | 8 | 11 to 12.125 | 11.625 | 1 x 36 x 4 |
| RDWA-35-80V-108XP | 35 | 220 | 8.0 | 4.5 | 0.188 | 32.66 | 8 | 11 to 12.125 | 11.625 | 1 x 36 x 4 |
| RDWA-35-80H-108XP | 35 | 269 | 8.0 | 4.5 | 0.250 | 32.66 | 8 | 11 to 12.125 | 11.625 | 1 x 36 x 4 |
| RDWA-39-80V-104XP | 39 | 237 | 8.0 | 4.5 | 0.188 | 36.66 | 4 | 11 to 12.125 | 11.625 | 1 x 36 x 4 |
| RDWA-39-80H-104XP | 39 | 299 | 8.0 | 4.5 | 0.250 | 36.66 | 4 | 11 to 12.125 | 11.625 | 1 x 36 x 4 |
| RDWA-39-80V-106XP | 39 | 240 | 8.0 | 4.5 | 0.188 | 36.66 | 6 | 11 to 12.125 | 11.625 | 1 x 36 x 4 |
| RDWA-39-80H-106XP | 39 | 302 | 8.0 | 4.5 | 0.250 | 36.66 | 6 | 11 to 12.125 | 11.625 | 1 x 36 x 4 |
| RDWA-39-80V-108XP | 39 | 242 | 8.0 | 4.5 | 0.188 | 36.66 | 8 | 11 to 12.125 | 11.625 | 1 x 36 x 4 |
| RDWA-39-80H-108XP | 39 | 304 | 8.0 | 4.5 | 0.250 | 36.66 | 8 | 11 to 12.125 | 11.625 | 1 x 36 x 4 |

MAVERICK®
POLES AND STRUCTURE, LLC.

**Replace "X" with the Following:**
B - Bolt-mounted
C - Clamp-mounted

# Roadway – 1TA-Series

## STRUCTURE LOADING CAPACITIES

| Catalog Number | Maximum Loading | | | | | | | | | |
|---|---|---|---|---|---|---|---|---|---|---|
| | 70 mph | | 80 mph | | 90 mph | | 100 mph | | 110 mph | |
| | EPA (ft2) | Wt. (lbs) | EPA (ft2) | Wt. (lbs) | EPA (ft2) | Wt. (lbs) | EPA (ft2) | Wt. (lbs) | EPA (ft2) | Wt. (lbs) |
| RDWA-20-50B-104XP | 6.0 | 150 | 4.1 | 103 | 2.5 | 63 | 1.5 | 38 | 0.7 | 18 |
| RDWA-20-50V-104XP | 6.0 | 150 | 5.7 | 143 | 3.7 | 93 | 2.5 | 63 | 1.6 | 40 |
| RDWA-20-60B-104XP | 6.0 | 150 | 6.0 | 150 | 5.3 | 133 | 4.0 | 100 | 2.9 | 73 |
| RDWA-20-60V-104XP | 6.0 | 150 | 6.0 | 150 | 5.3 | 133 | 4.2 | 105 | 3.5 | 88 |
| RDWA-20-50B-106XP | 5.9 | 148 | 3.5 | 88 | 2.0 | 50 | 1.0 | 25 | --- | --- |
| RDWA-20-50V-106XP | 6.0 | 150 | 4.7 | 118 | 3.2 | 80 | 2.0 | 50 | 1.0 | 25 |
| RDWA-20-60B-106XP | 6.0 | 150 | 4.7 | 118 | 3.6 | 90 | 2.8 | 70 | 2.3 | 58 |
| RDWA-20-60B-108XP | 4.5 | 113 | 3.2 | 80 | 2.4 | 60 | 1.7 | 43 | 1.3 | 33 |
| RDWA-25-60B-104XP | 6.0 | 150 | 4.2 | 105 | 2.5 | 63 | 1.5 | 38 | 0.7 | 18 |
| RDWA-25-60V-104XP | 6.0 | 150 | 6.0 | 150 | 3.9 | 98 | 2.6 | 65 | 1.7 | 43 |
| RDWA-25-70B-104XP | 6.0 | 150 | 6.0 | 150 | 5.3 | 133 | 3.9 | 98 | 2.8 | 70 |
| RDWA-25-60B-106XP | 6.0 | 150 | 3.6 | 90 | 2.0 | 50 | 1.0 | 25 | --- | --- |
| RDWA-25-60V-106XP | 6.0 | 150 | 4.7 | 118 | 3.4 | 85 | 2.1 | 53 | 1.3 | 33 |
| RDWA-25-70B-106XP | 6.0 | 150 | 4.7 | 118 | 3.6 | 90 | 2.8 | 70 | 2.3 | 58 |
| RDWA-25-60B-108XP | 4.5 | 113 | 2.9 | 73 | 1.3 | 33 | --- | --- | --- | --- |
| RDWA-25-60V-108XP | 4.5 | 113 | 3.2 | 80 | 2.4 | 60 | 1.2 | 30 | --- | --- |
| RDWA-25-70B-108XP | 4.5 | 113 | 3.2 | 80 | 2.4 | 60 | 1.7 | 43 | 1.3 | 33 |
| RDWA-30-70B-104XP | 6.0 | 150 | 4.4 | 110 | 2.7 | 68 | 1.5 | 38 | 0.8 | 20 |
| RDWA-30-80B-104XP | 6.0 | 150 | 6.0 | 150 | 5.3 | 133 | 4.0 | 100 | 2.7 | 68 |
| RDWA-30-80V-104XP | 6.0 | 150 | 6.0 | 150 | 5.3 | 133 | 4.2 | 105 | 3.5 | 88 |
| RDWA-30-70B-106XP | 6.0 | 150 | 3.9 | 98 | 2.2 | 55 | 1.1 | 28 | --- | --- |
| RDWA-30-80B-106XP | 6.0 | 150 | 4.7 | 118 | 3.6 | 90 | 2.8 | 70 | 2.3 | 58 |
| RDWA-30-70B-108XP | 4.5 | 113 | 3.2 | 80 | 1.5 | 38 | --- | --- | --- | --- |
| RDWA-30-80B-108XP | 4.5 | 113 | 3.2 | 80 | 2.4 | 60 | 1.7 | 43 | 1.3 | 33 |
| RDWA-35-80B-104XP | 6.0 | 150 | 4.7 | 118 | 2.9 | 73 | 1.7 | 43 | 0.9 | 23 |
| RDWA-35-80V-104XP | 6.0 | 150 | 6.0 | 150 | 4.8 | 120 | 3.3 | 83 | 2.1 | 53 |
| RDWA-35-80H-104XP | 6.0 | 150 | 6.0 | 150 | 5.3 | 133 | 4.2 | 105 | 3.5 | 88 |
| RDWA-35-80B-106XP | 6.0 | 150 | 4.2 | 105 | 2.4 | 60 | 1.3 | 33 | --- | --- |
| RDWA-35-80V-106XP | 6.0 | 150 | 4.7 | 118 | 3.6 | 90 | 2.8 | 70 | 1.6 | 40 |
| RDWA-35-80H-106XP | 6.0 | 150 | 4.7 | 118 | 3.6 | 90 | 2.8 | 70 | 2.3 | 58 |
| RDWA-35-80B-108XP | 4.5 | 113 | 3.2 | 80 | 1.5 | 38 | --- | --- | --- | --- |
| RDWA-35-80V-108XP | 4.5 | 113 | 3.2 | 80 | 2.4 | 60 | 1.7 | 43 | 0.8 | 20 |
| RDWA-35-80H-108XP | 4.5 | 113 | 3.2 | 80 | 2.4 | 60 | 1.7 | 43 | 1.3 | 33 |
| RDWA-39-80V-104XP | 6.0 | 150 | 4.6 | 115 | 2.8 | 70 | 1.6 | 40 | 0.7 | 18 |
| RDWA-39-80H-104XP | 6.0 | 150 | 6.0 | 150 | 5.3 | 133 | 4.1 | 103 | 2.7 | 68 |
| RDWA-39-80V-106XP | 6.0 | 150 | 4.1 | 103 | 2.4 | 60 | 1.1 | 28 | --- | --- |
| RDWA-39-80H-106XP | 6.0 | 150 | 4.7 | 118 | 3.6 | 90 | 2.8 | 70 | 2.3 | 58 |
| RDWA-39-80V-108XP | 4.5 | 113 | 3.2 | 80 | 1.5 | 38 | --- | --- | --- | --- |
| RDWA-39-80H-108XP | 4.5 | 113 | 3.2 | 80 | 2.4 | 60 | 1.7 | 43 | 1.3 | 33 |

**Replace "X" with the Following:**
B - Bolt-mounted
C - Clamp-mounted

MAVERICK®
POLES AND STRUCTURE, LLC.

# Roadway — 1TA-Series (25' to 30')

## FOUNDATIONS (25' to 30') RDWA-1TA

| Catalog Number | Foundation Data | | | | | | Anchor Bolt Data | |
|---|---|---|---|---|---|---|---|---|
| | Caisson Diameter (in) | Caisson Depth (ft) | Vert Rebar Qty | Vert Rebar Size | Concrete Volume (Cu Yds) | Steel Weight (lbs) | Dia x Lgth x Hk | Bolt Circle Range (in) |
| RDWA-25-60B-106XT | 24 | 5.00 | 8 | #6 | 0.58 | 75 | 0.75 x 17 x 3 | 8.75 to 10.25 |
| RDWA-25-60V-106XT | 24 | 5.00 | 8 | #6 | 0.58 | 75 | 0.75 x 17 x 3 | 8.75 to 10.25 |
| RDWA-25-70B-106XT | 24 | 5.00 | 8 | #6 | 0.58 | 75 | 1 x 36 x 4 | 9.875 to 11.25 |
| RDWA-25-80B-106XT | 24 | 5.00 | 8 | #6 | 0.58 | 75 | 1 x 36 x 4 | 11 to 12.125 |
| RDWA-25-60B-108XT | 24 | 5.00 | 8 | #6 | 0.58 | 75 | 0.75 x 17 x 3 | 8.75 to 10.25 |
| RDWA-25-60V-108XT | 24 | 5.00 | 8 | #6 | 0.58 | 75 | 0.75 x 17 x 3 | 8.75 to 10.25 |
| RDWA-25-70B-108XT | 24 | 5.00 | 8 | #6 | 0.58 | 75 | 1 x 36 x 4 | 9.875 to 11.25 |
| RDWA-25-80B-108XT | 24 | 5.00 | 8 | #6 | 0.58 | 75 | 1 x 36 x 4 | 11 to 12.125 |
| RDWA-25-80B-110XT | 24 | 5.00 | 8 | #6 | 0.58 | 75 | 1 x 36 x 4 | 11 to 12.125 |
| RDWA-25-80B-112XT | 24 | 5.00 | 8 | #6 | 0.58 | 75 | 1 x 36 x 4 | 11 to 12.125 |
| RDWA-25-80B-115XT | 24 | 5.00 | 8 | #6 | 0.58 | 75 | 1 x 36 x 4 | 11 to 12.125 |
| RDWA-30-70B-106XT | 24 | 6.00 | 8 | #6 | 0.70 | 91 | 1 x 36 x 4 | 9.875 to 11.25 |
| RDWA-30-80B-106XT | 24 | 6.00 | 8 | #6 | 0.70 | 91 | 1 x 36 x 4 | 11 to 12.125 |
| RDWA-30-70B-108XT | 24 | 6.00 | 8 | #6 | 0.70 | 91 | 1 x 36 x 4 | 9.875 to 11.25 |
| RDWA-30-80B-108XT | 24 | 6.00 | 8 | #6 | 0.70 | 91 | 1 x 36 x 4 | 11 to 12.125 |
| RDWA-30-80B-110XT | 24 | 6.00 | 8 | #6 | 0.70 | 91 | 1 x 36 x 4 | 11 to 12.125 |
| RDWA-30-80V-110XT | 24 | 6.00 | 8 | #6 | 0.70 | 91 | 1 x 36 x 4 | 11 to 12.125 |
| RDWA-30-80B-112XT | 24 | 6.00 | 8 | #6 | 0.70 | 91 | 1 x 36 x 4 | 11 to 12.125 |
| RDWA-30-80V-112XT | 24 | 6.00 | 8 | #6 | 0.70 | 91 | 1 x 36 x 4 | 11 to 12.125 |
| RDWA-30-80V-115XT | 24 | 6.00 | 8 | #6 | 0.70 | 91 | 1 x 36 x 4 | 11 to 12.125 |

**Notes:**

1. The above information is for estimating purposes only. Do not use for construction.
2. Analysis is based upon Brom's method of foundation design.
3. All of the designs are based upon the following soil parameters:
   a. Soil is homogeneous, non-cohesive
   b. $\phi$ = 30 degrees
   c. $\gamma$ = 110 pcf.
   d. Water table is below bottom of foundation.
   e. Site grade is 7H:1V or flatter.
4. Concrete 28 day compressive strength = 3000 psi.
5. Reinforcing meets the requirements of ASTM A615 grade 60.
6. Concrete design is in accordance with ACI 318-95.
7. Concrete is cast against undisturbed soil.
8. All reinforcing must be covered by a minimum of 3" of concrete on all sides.
9. All vertical reinforcing bars are equally spaced.
10. #4 reinforcing bars are used as hoops and are spaced on 12" centers.

NOT FOR CONSTRUCTION
FOR ESTIMATION ONLY

MAVERICK®
POLES AND STRUCTURE, LLC.

*The information above is provided for preliminary estimating use only and may not be used as final or construction designs.*

# Roadway — 1TA-Series (35' to 39')

## FOUNDATIONS (35' to 39') RDWA-1TA

| Catalog Number | Foundation Data | | | | | | Anchor Bolt Data | |
|---|---|---|---|---|---|---|---|---|
| | Caisson Diameter (in) | Caisson Depth (ft) | Vert Rebar Qty | Vert Rebar Size | Concrete Volume (Cu Yds) | Steel Weight (lbs) | Dia x Lgth x Hk | Bolt Circle Range (in) |
| RDWA-35-80V-106XT | 24 | 7.00 | 10 | #6 | 0.81 | 127 | 1 x 36 x 4 | 11 to 12.125 |
| RDWA-35-80H-106XT | 24 | 7.00 | 10 | #6 | 0.81 | 127 | 1 x 36 x 4 | 11 to 12.125 |
| RDWA-35-80B-108XT | 24 | 7.00 | 10 | #6 | 0.81 | 127 | 1 x 36 x 4 | 11 to 12.125 |
| RDWA-35-80V-108XT | 24 | 7.00 | 10 | #6 | 0.81 | 127 | 1 x 36 x 4 | 11 to 12.125 |
| RDWA-35-80H-108XT | 24 | 7.00 | 10 | #6 | 0.81 | 127 | 1 x 36 x 4 | 11 to 12.125 |
| RDWA-35-80B-110XT | 24 | 7.00 | 10 | #6 | 0.81 | 127 | 1 x 36 x 4 | 11 to 12.125 |
| RDWA-35-80V-110XT | 24 | 7.00 | 10 | #6 | 0.81 | 127 | 1 x 36 x 4 | 11 to 12.125 |
| RDWA-35-80H-110XT | 24 | 7.00 | 10 | #6 | 0.81 | 127 | 1 x 36 x 4 | 11 to 12.125 |
| RDWA-35-80V-112XT | 24 | 7.00 | 10 | #6 | 0.81 | 127 | 1 x 36 x 4 | 11 to 12.125 |
| RDWA-35-80H-112XT | 24 | 7.00 | 10 | #6 | 0.81 | 127 | 1 x 36 x 4 | 11 to 12.125 |
| RDWA-35-80H-115XT | 24 | 7.00 | 10 | #6 | 0.81 | 127 | 1 x 36 x 4 | 11 to 12.125 |
| RDWA-39-80V-106XT | 24 | 8.00 | 10 | #6 | 0.93 | 146 | 1 x 36 x 4 | 11 to 12.125 |
| RDWA-39-80H-106XT | 24 | 8.00 | 10 | #6 | 0.93 | 146 | 1 x 36 x 4 | 11 to 12.125 |
| RDWA-39-80V-108XT | 24 | 8.00 | 12 | #6 | 0.93 | 169 | 1 x 36 x 4 | 11 to 12.125 |
| RDWA-39-80H-108XT | 24 | 8.00 | 12 | #6 | 0.93 | 169 | 1 x 36 x 4 | 11 to 12.125 |
| RDWA-39-80V-110XT | 24 | 8.00 | 12 | #6 | 0.93 | 169 | 1 x 36 x 4 | 11 to 12.125 |
| RDWA-39-80H-110XT | 24 | 8.00 | 12 | #6 | 0.93 | 169 | 1 x 36 x 4 | 11 to 12.125 |
| RDWA-39-10V-110XT | 30 | 8.00 | 12 | #6 | 1.45 | 177 | 1 x 36 x 4 | 14.5 |
| RDWA-39-80H-112XT | 24 | 8.00 | 12 | #6 | 0.93 | 169 | 1 x 36 x 4 | 11 to 12.125 |
| RDWA-39-10V-112XT | 30 | 8.00 | 12 | #6 | 1.45 | 177 | 1 x 36 x 4 | 14.5 |
| RDWA-39-80H-115XT | 24 | 8.00 | 12 | #6 | 0.93 | 169 | 1 x 36 x 4 | 11 to 12.125 |

**Notes:**

1. **The above information is for estimating purposes only. Do not use for construction.**
2. **Analysis is based upon Brom's method of foundation design.**
3. **All of the designs are based upon the following soil parameters:**
   - **a. Soil is homogeneous, non-cohesive**
   - **b. $\phi$ = 30 degrees**
   - **c. $\gamma$ = 110 pcf.**
   - **d. Water table is below bottom of foundation.**
   - **e. Site grade is 7H:1V or flatter.**
4. **Concrete 28 day compressive strength = 3000 psi.**
5. **Reinforcing meets the requirements of ASTM A615 grade 60.**
6. **Concrete design is in accordance with ACI 318-95.**
7. **Concrete is cast against undisturbed soil.**
8. **All reinforcing must be covered by a minimum of 3" of concrete on all sides.**
9. **All vertical reinforcing bars are equally spaced.**
10. **#4 reinforcing bars are used as hoops and are spaced on 12" centers.**

NOT FOR CONSTRUCTION.
FOR ESTIMATION ONLY.

*The information above is provided for preliminary estimating use only and may not be used as final or construction designs.*

MAVERICK®
POLES AND STRUCTURE, LLC.

# Roadway — 1TA-Series

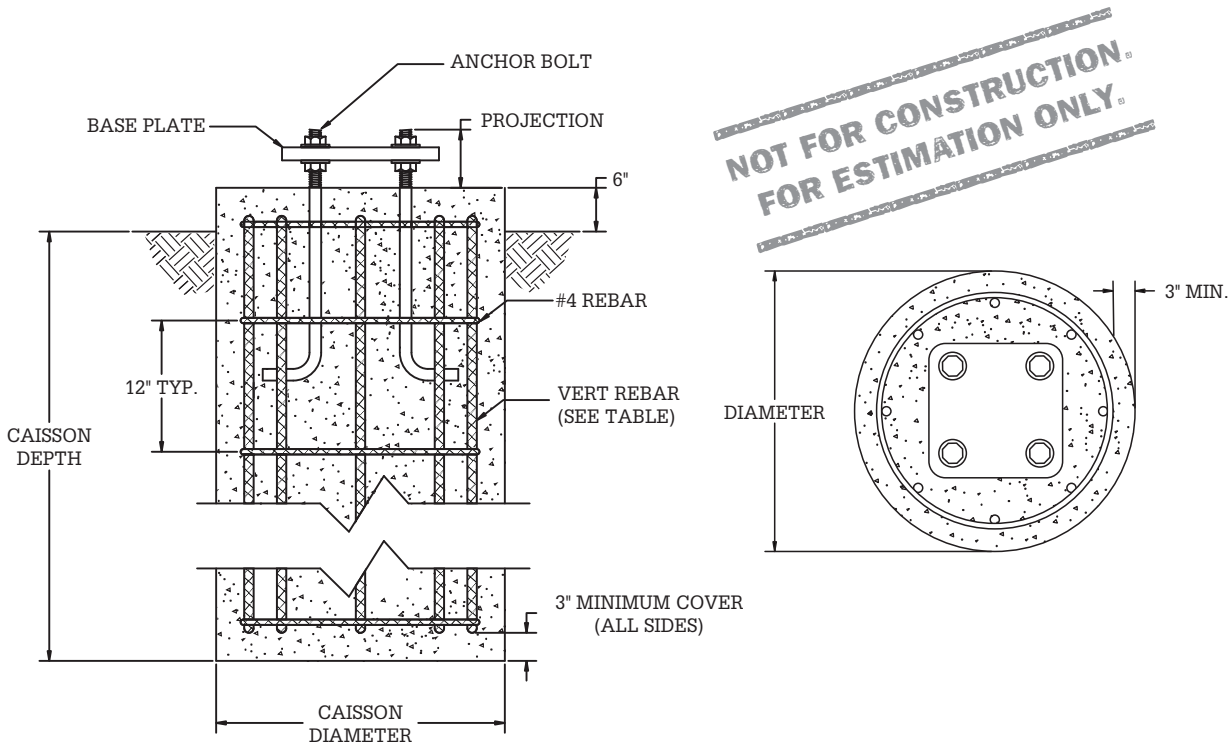


*The information above is provided for preliminary estimating use only and may not be used as final or construction designs.*

MAVERICK®
POLES AND STRUCTURE, LLC.

# Roadway – 2TA-Series

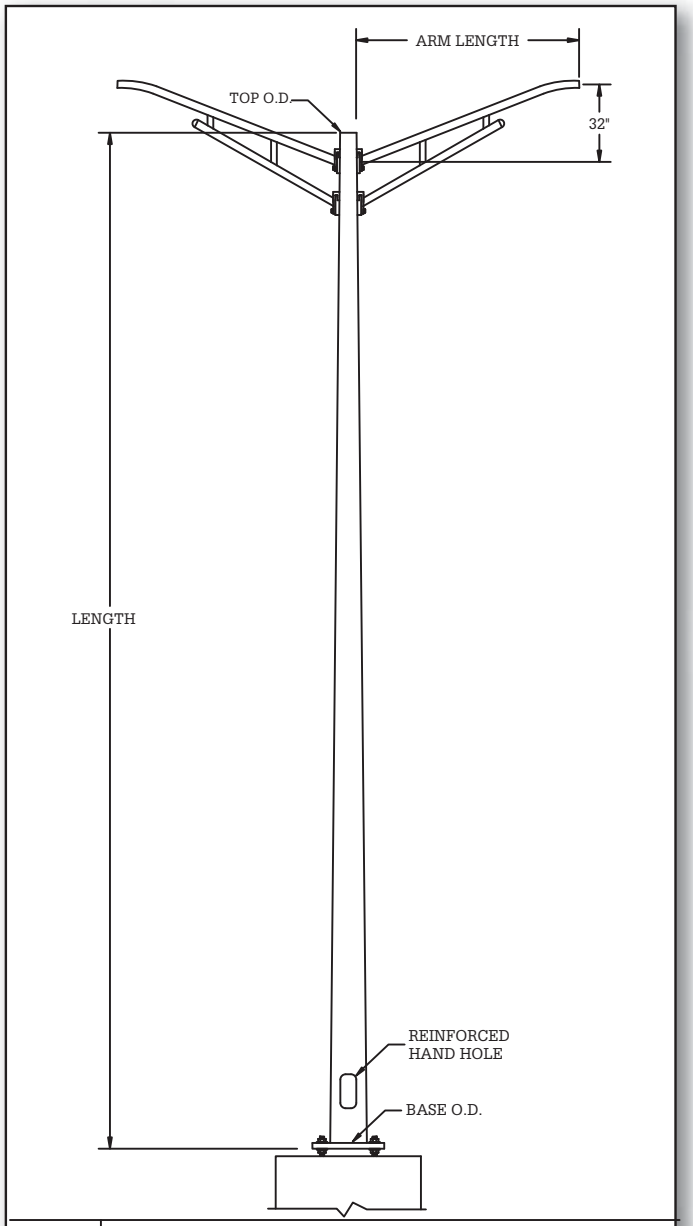


DETAIL | **POLE ASSEMBLY**

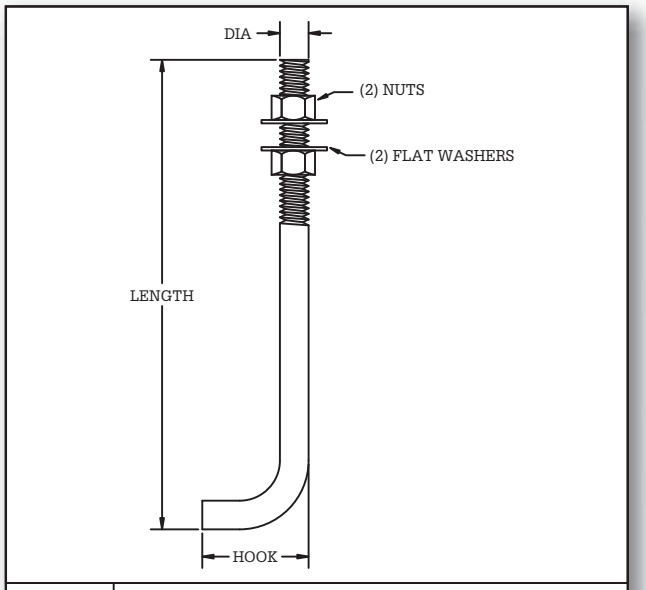


DETAIL 1 | **ANCHOR-BOLT**

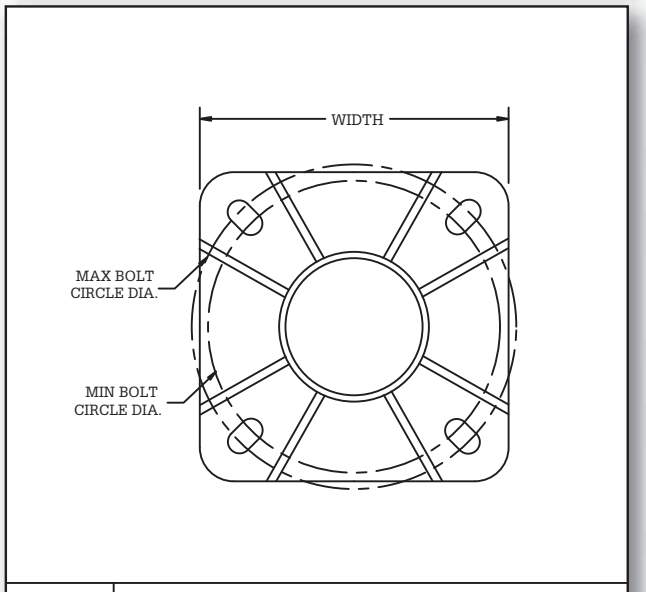


DETAIL 2 | **BASEPLATE**

MAVERICK®
POLES AND STRUCTURE, LLC.

# *Roadway – 2TA-Series*

**Double Truss Arm**

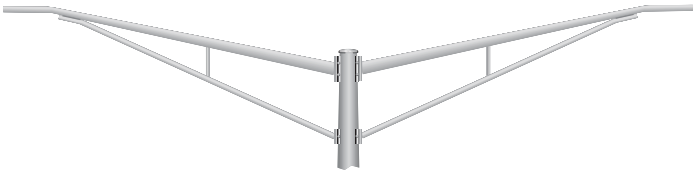

**Bolt-mounted**

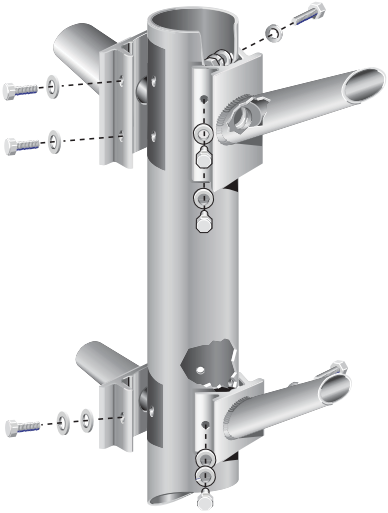

**Clamp-mounted**

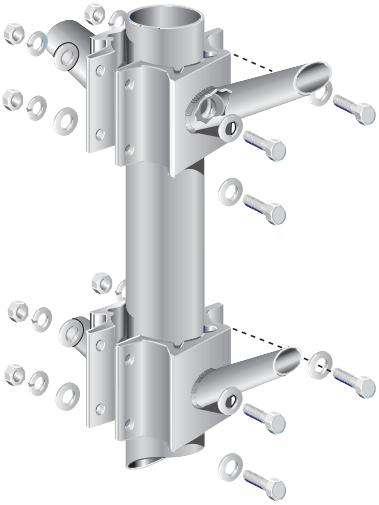

# Roadway – 2TA-Series (25' to 30' Mounting Heights)

## STRUCTURE DATA

| Catalog Number | Mounting Height (ft) | Gross Weight (Lbs) | Pole Shaft Data | | | | Arm | Base Plate Data | | Anchor Bolt Data |
|---|---|---|---|---|---|---|---|---|---|---|
| | | | Base O.D. (in) | Top O.D. (in) | Wall Thk. (in) | Shaft Length (ft) | Length (ft) | Bolt Circle Range (in) | Plate Square (in) | Dia x Lgth x Hk |
| RDWA-25-60V-206XT | 25 | 151 | 6.0 | 4.0 | 0.188 | 22.08 | 6 | 8.75 to 10.25 | 10.25 | 0.75 x 17 x 3 |
| RDWA-25-70B-206XT | 25 | 166 | 7.0 | 4.0 | 0.156 | 22.08 | 6 | 9.875 to 11.25 | 10.63 | 1 x 36 x 4 |
| RDWA-25-80B-206XT | 25 | 178 | 8.0 | 4.5 | 0.156 | 22.08 | 6 | 11 to 12.125 | 11.63 | 1 x 36 x 4 |
| RDWA-25-80V-206XT | 25 | 197 | 8.0 | 4.5 | 0.188 | 22.08 | 6 | 11 to 12.125 | 11.63 | 1 x 36 x 4 |
| RDWA-25-60V-208XT | 25 | 153 | 6.0 | 4.0 | 0.188 | 22.08 | 8 | 8.75 to 10.25 | 10.25 | 0.75 x 17 x 3 |
| RDWA-25-70B-208XT | 25 | 168 | 7.0 | 4.0 | 0.156 | 22.08 | 8 | 9.875 to 11.25 | 10.63 | 1 x 36 x 4 |
| RDWA-25-80B-208XT | 25 | 180 | 8.0 | 4.5 | 0.156 | 22.08 | 8 | 11 to 12.125 | 11.63 | 1 x 36 x 4 |
| RDWA-25-70B-210XT | 25 | 182 | 7.0 | 4.0 | 0.156 | 22.08 | 10 | 9.875 to 11.25 | 10.63 | 1 x 36 x 4 |
| RDWA-25-80B-210XT | 25 | 194 | 8.0 | 4.5 | 0.156 | 22.08 | 10 | 11 to 12.125 | 11.63 | 1 x 36 x 4 |
| RDWA-25-80V-210XT | 25 | 213 | 8.0 | 4.5 | 0.188 | 22.08 | 10 | 11 to 12.125 | 11.63 | 1 x 36 x 4 |
| RDWA-25-80H-210XT | 25 | 260 | 8.0 | 4.5 | 0.25 | 22.08 | 10 | 11 to 12.125 | 11.63 | 1 x 36 x 4 |
| RDWA-25-70B-212XT | 25 | 192 | 7.0 | 4.0 | 0.156 | 22.08 | 12 | 9.875 to 11.25 | 10.63 | 1 x 36 x 4 |
| RDWA-25-80B-212XT | 25 | 204 | 8.0 | 4.5 | 0.156 | 22.08 | 12 | 11 to 12.125 | 11.63 | 1 x 36 x 4 |
| RDWA-25-80V-212XT | 25 | 223 | 8.0 | 4.5 | 0.188 | 22.08 | 12 | 11 to 12.125 | 11.63 | 1 x 36 x 4 |
| RDWA-25-80H-212XT | 25 | 270 | 8.0 | 4.5 | 0.25 | 22.08 | 12 | 11 to 12.125 | 11.63 | 1 x 36 x 4 |
| RDWA-25-70B-215XT | 25 | 212 | 7.0 | 4.0 | 0.156 | 22.08 | 15 | 9.875 to 11.25 | 10.63 | 1 x 36 x 4 |
| RDWA-25-80B-215XT | 25 | 224 | 8.0 | 4.5 | 0.156 | 22.08 | 15 | 11 to 12.125 | 11.63 | 1 x 36 x 4 |
| RDWA-25-80V-215XT | 25 | 243 | 8.0 | 4.5 | 0.188 | 22.08 | 15 | 11 to 12.125 | 11.63 | 1 x 36 x 4 |
| RDWA-30-80B-206XT | 30 | 194 | 8.0 | 4.5 | 0.156 | 27.08 | 6 | 11 to 12.125 | 11.63 | 1 x 36 x 4 |
| RDWA-30-80V-206XT | 30 | 217 | 8.0 | 4.5 | 0.188 | 27.08 | 6 | 11 to 12.125 | 11.63 | 1 x 36 x 4 |
| RDWA-30-80H-206XT | 30 | 270 | 8.0 | 4.5 | 0.25 | 27.08 | 6 | 11 to 12.125 | 11.63 | 1 x 36 x 4 |
| RDWA-30-80B-208XT | 30 | 196 | 8.0 | 4.5 | 0.156 | 27.08 | 8 | 11 to 12.125 | 11.63 | 1 x 36 x 4 |
| RDWA-30-80V-208XT | 30 | 219 | 8.0 | 4.5 | 0.188 | 27.08 | 8 | 11 to 12.125 | 11.63 | 1 x 36 x 4 |
| RDWA-30-80H-208XT | 30 | 272 | 8.0 | 4.5 | 0.25 | 27.08 | 8 | 11 to 12.125 | 11.63 | 1 x 36 x 4 |
| RDWA-30-70B-210XT | 30 | 206 | 7.0 | 4.0 | 0.156 | 27.08 | 10 | 9.875 to 11.25 | 10.63 | 1 x 36 x 4 |
| RDWA-30-80B-210XT | 30 | 210 | 8.0 | 4.5 | 0.156 | 27.08 | 10 | 11 to 12.125 | 11.63 | 1 x 36 x 4 |
| RDWA-30-80V-210XT | 30 | 233 | 8.0 | 4.5 | 0.188 | 27.08 | 10 | 11 to 12.125 | 11.63 | 1 x 36 x 4 |
| RDWA-30-80H-210XT | 30 | 286 | 8.0 | 4.5 | 0.25 | 27.08 | 10 | 11 to 12.125 | 11.63 | 1 x 36 x 4 |
| RDWA-30-10V-210XT | 30 | 275 | 10.0 | 6.0 | 0.188 | 27.08 | 10 | 14.50 | 14.50 | 1 x 36 x 4 |
| RDWA-30-80B-212XT | 30 | 220 | 8.0 | 4.5 | 0.156 | 27.08 | 12 | 11 to 12.125 | 11.63 | 1 x 36 x 4 |
| RDWA-30-80V-212XT | 30 | 243 | 8.0 | 4.5 | 0.188 | 27.08 | 12 | 11 to 12.125 | 11.63 | 1 x 36 x 4 |
| RDWA-30-80H-212XT | 30 | 296 | 8.0 | 4.5 | 0.25 | 27.08 | 12 | 11 to 12.125 | 11.63 | 1 x 36 x 4 |
| RDWA-30-10V-212XT | 30 | 285 | 10.0 | 6.0 | 0.188 | 27.08 | 12 | 14.5 | 14.5 | 1 x 36 x 4 |
| RDWA-30-80V-215XT | 30 | 263 | 8.0 | 4.5 | 0.188 | 27.08 | 15 | 11 to 12.125 | 11.63 | 1 x 36 x 4 |
| RDWA-30-80H-215XT | 30 | 316 | 8.0 | 4.5 | 0.25 | 27.08 | 15 | 11 to 12.125 | 11.63 | 1 x 36 x 4 |

**Replace "X" with the Following:**
B - Bolt-mounted
C - Clamp-mounted

MAVERICK®
POLES AND STRUCTURE, LLC.

# Roadway – 2TA-Series (25' to 30' Mounting Heights)

## STRUCTURE LOADING CAPACITIES

| Catalog Number | Maximum Loading | | | | | | | | | |
|---|---|---|---|---|---|---|---|---|---|---|
| | 70 mph | | 80 mph | | 90 mph | | 100 mph | | 110 mph | |
| | EPA (ft2) | Wt. (lbs) | EPA (ft2) | Wt. (lbs) | EPA (ft2) | Wt. (lbs) | EPA (ft2) | Wt. (lbs) | EPA (ft2) | Wt. (lbs) |
| RDWA-25-60V-206XT | 4.9 | 123 | 3.1 | 78 | 1.8 | 45 | 1.1 | 28 | --- | --- |
| RDWA-25-70B-206XT | 6.5 | 163 | 5.5 | 138 | 2.8 | 70 | 1.8 | 45 | 1.2 | 30 |
| RDWA-25-80B-206XT | 7.1 | 178 | 6.8 | 170 | 4.9 | 123 | 3.5 | 88 | 2.6 | 65 |
| RDWA-25-80V-206XT | 7.1 | 178 | 7.1 | 178 | 6.6 | 165 | 4.9 | 123 | 3.6 | 90 |
| RDWA-25-60V-208XT | 2.9 | 73 | 1.1 | 28 | --- | --- | --- | --- | --- | --- |
| RDWA-25-70B-208XT | 4.4 | 110 | 2.1 | 53 | 0.7 | 18 | --- | --- | --- | --- |
| RDWA-25-80B-208XT | 5.3 | 133 | 3.8 | 95 | 2.8 | 70 | 1.5 | 38 | 0.6 | 15 |
| RDWA-25-70B-210XT | 5.6 | 140 | 3.5 | 88 | 2.1 | 53 | 1.2 | 30 | 0.6 | 15 |
| RDWA-25-80B-210XT | 7.1 | 178 | 6.0 | 150 | 4.2 | 105 | 2.9 | 73 | 1.9 | 48 |
| RDWA-25-80V-210XT | 7.1 | 178 | 7.1 | 178 | 5.8 | 145 | 4.2 | 105 | 3.1 | 78 |
| RDWA-25-80H-210XT | 7.1 | 178 | 7.1 | 178 | 6.8 | 170 | 5.5 | 138 | 4.6 | 115 |
| RDWA-25-70B-212XT | 5.3 | 133 | 3.2 | 80 | 1.9 | 48 | 0.9 | 23 | --- | --- |
| RDWA-25-80B-212XT | 7.1 | 178 | 5.6 | 140 | 3.9 | 98 | 2.6 | 65 | 1.6 | 40 |
| RDWA-25-80V-212XT | 7.1 | 178 | 6.9 | 173 | 5.1 | 128 | 3.9 | 98 | 2.7 | 68 |
| RDWA-25-80H-212XT | 7.1 | 178 | 6.9 | 173 | 5.1 | 128 | 3.9 | 98 | 3.2 | 80 |
| RDWA-25-70B-215XT | 4.6 | 115 | 2.5 | 63 | 1.2 | 30 | --- | --- | --- | --- |
| RDWA-25-80B-215XT | 6.8 | 170 | 4.8 | 120 | 3.2 | 80 | 1.9 | 48 | 1.1 | 28 |
| RDWA-25-80V-215XT | 6.8 | 170 | 4.8 | 120 | 3.6 | 90 | 2.7 | 68 | 2.0 | 50 |
| RDWA-30-80B-206XT | 6.5 | 163 | 4.2 | 105 | 2.8 | 70 | --- | --- | 1.2 | 30 |
| RDWA-30-80V-206XT | 7.1 | 178 | 5.9 | 148 | 4.1 | 103 | 2.9 | 73 | 2.0 | 50 |
| RDWA-30-80H-206XT | 7.1 | 178 | 7.1 | 178 | 6.7 | 168 | 4.9 | 123 | 3.6 | 90 |
| RDWA-30-80B-208XT | 4.4 | 110 | 2.1 | 53 | 0.8 | 20 | --- | --- | --- | --- |
| RDWA-30-80V-208XT | 5.3 | 133 | 3.8 | 95 | 2.1 | 53 | 0.9 | 23 | --- | --- |
| RDWA-30-80H-208XT | 5.3 | 133 | 3.8 | 95 | 2.8 | 70 | 2.0 | 50 | 1.5 | 38 |
| RDWA-30-70B-210XT | 3.1 | 78 | 4.1 | 103 | --- | --- | --- | --- | --- | --- |
| RDWA-30-80B-210XT | 5.6 | 140 | 3.5 | 88 | 2.1 | 53 | 1.2 | 30 | --- | -- |
| RDWA-30-80V-210XT | 7.1 | 178 | 5.2 | 130 | 3.4 | 85 | 2.2 | 55 | 1.4 | 35 |
| RDWA-30-80H-210XT | 7.1 | 178 | 7.1 | 178 | 6.0 | 150 | 4.2 | 105 | 3.1 | 78 |
| RDWA-30-10V-210XT | 7.1 | 178 | 7.1 | 178 | 6.8 | 170 | 5.5 | 138 | 4.5 | 113 |
| RDWA-30-80B-212XT | 5.4 | 135 | 3.2 | 80 | 1.9 | 48 | 0.9 | 23 | --- | --- |
| RDWA-30-80V-212XT | 7.1 | 178 | 4.9 | 123 | 3.2 | 80 | 2.0 | 50 | 1.2 | 30 |
| RDWA-30-80H-212XT | 7.1 | 178 | 6.9 | 173 | 5.1 | 128 | 3.9 | 98 | 2.8 | 70 |
| RDWA-30-10V-212XT | 7.1 | 178 | 6.9 | 173 | 5.1 | 128 | 3.9 | 98 | 3.2 | 80 |
| RDWA-30-80V-215XT | 6.7 | 168 | 4.1 | 103 | 2.5 | 63 | 1.3 | 33 | --- | --- |
| RDWA-30-80H-215XT | 6.8 | 170 | 4.8 | 120 | 3.6 | 90 | 2.7 | 68 | 2.1 | 53 |

**Replace "X" with the Following:**
B - Bolt-mounted
C - Clamp-mounted

MAVERICK®
POLES AND STRUCTURE, LLC.

# Roadway – 2TA-Series (35' to 39' Mounting Heights)

## STRUCTURE DATA

| Catalog Number | Mounting Height (ft) | Gross Weight (Lbs) | Pole Shaft Data | | | | Arm | Base Plate Data | | Anchor Bolt Data |
|---|---|---|---|---|---|---|---|---|---|---|
| | | | Base O.D. (in) | Top O.D. (in) | Wall Thk. (in) | Shaft Length (ft) | Length (ft) | Bolt Circle Range (in) | Plate Square (in) | Dia x Lgth x Hk |
| RDWA-35-80B-206XT | 35 | 221 | 8.0 | 4.5 | 0.156 | 32.08 | 6 | 11 to 12.125 | 11.63 | 1 x 36 x 4 |
| RDWA-35-80V-206XT | 35 | 248 | 8.0 | 4.5 | 0.188 | 32.08 | 6 | 11 to 12.125 | 11.63 | 1 x 36 x 4 |
| RDWA-35-80H-206XT | 35 | 297 | 8.0 | 4.5 | 0.250 | 32.08 | 6 | 11 to 12.125 | 11.63 | 1 x 36 x 4 |
| RDWA-35-10V-206XT | 35 | 301 | 10.0 | 6.0 | 0.188 | 32.08 | 6 | 14.5 | 14.5 | 1 x 36 x 4 |
| RDWA-35-80V-208XT | 35 | 250 | 8.0 | 4.5 | 0.188 | 32.08 | 8 | 11 to 12.125 | 11.63 | 1 x 36 x 4 |
| RDWA-35-80H-208XT | 35 | 299 | 8.0 | 4.5 | 0.250 | 32.08 | 8 | 11 to 12.125 | 11.63 | 1 x 36 x 4 |
| RDWA-35-10V-208XT | 35 | 303 | 10.0 | 6.0 | 0.188 | 32.08 | 8 | 14.5 | 14.5 | 1 x 36 x 4 |
| RDWA-35-80V-210XT | 35 | 264 | 8.0 | 4.5 | 0.188 | 32.08 | 10 | 11 to 12.125 | 11.63 | 1 x 36 x 4 |
| RDWA-35-80H-210XT | 35 | 313 | 8.0 | 4.5 | 0.250 | 32.08 | 10 | 11 to 12.125 | 11.63 | 1 x 36 x 4 |
| RDWA-35-10V-210XT | 35 | 317 | 10.0 | 6.0 | 0.188 | 32.08 | 10 | 14.5 | 14.5 | 1 x 36 x 4 |
| RDWA-35-10H-210XT | 35 | 414 | 10.0 | 6.0 | 0.250 | 32.08 | 10 | 14.5 | 14.5 | 1.25 x 42 x 6 |
| RDWA-35-80V-212XT | 35 | 274 | 8.0 | 4.5 | 0.188 | 32.08 | 12 | 11 to 12.125 | 11.63 | 1 x 36 x 4 |
| RDWA-35-80H-212XT | 35 | 323 | 8.0 | 4.5 | 0.250 | 32.08 | 12 | 11 to 12.125 | 11.63 | 1 x 36 x 4 |
| RDWA-35-10V-212XT | 35 | 327 | 10.0 | 6.0 | 0.188 | 32.08 | 12 | 14.5 | 14.5 | 1 x 36 x 4 |
| RDWA-35-10H-212XT | 35 | 424 | 10.0 | 6.0 | 0.250 | 32.08 | 12 | 14.5 | 14.5 | 1.25 x 42 x 6 |
| RDWA-35-80V-215XT | 35 | 294 | 8.0 | 4.5 | 0.188 | 32.08 | 15 | 11 to 12.125 | 11.63 | 1 x 36 x 4 |
| RDWA-35-80H-215XT | 35 | 343 | 8.0 | 4.5 | 0.250 | 32.08 | 15 | 11 to 12.125 | 11.63 | 1 x 36 x 4 |
| RDWA-35-10V-215XT | 35 | 347 | 10.0 | 6.0 | 0.188 | 32.08 | 15 | 14.5 | 14.5 | 1 x 36 x 4 |
| RDWA-39-80V-206XT | 39 | 270 | 8.0 | 4.5 | 0.188 | 36.08 | 6 | 11 to 12.125 | 11.63 | 1 x 36 x 4 |
| RDWA-39-80H-206XT | 39 | 332 | 8.0 | 4.5 | 0.250 | 36.08 | 6 | 11 to 12.125 | 11.63 | 1 x 36 x 4 |
| RDWA-39-10V-206XT | 39 | 315 | 10.0 | 6.0 | 0.188 | 36.08 | 6 | 14.5 | 14.5 | 1 x 36 x 4 |
| RDWA-39-10H-206XT | 39 | 431 | 10.0 | 6.0 | 0.250 | 36.08 | 6 | 14.5 | 14.5 | 1.25 x 42 x 6 |
| RDWA-39-80H-208XT | 39 | 334 | 8.0 | 4.5 | 0.250 | 36.08 | 8 | 11 to 12.125 | 11.63 | 1 x 36 x 4 |
| RDWA-39-10V-208XT | 39 | 317 | 10.0 | 6.0 | 0.188 | 36.08 | 8 | 14.5 | 14.5 | 1 x 36 x 4 |
| RDWA-39-10H-208XT | 39 | 433 | 10.0 | 6.0 | 0.250 | 36.08 | 8 | 14.5 | 14.5 | 1.25 x 42 x 6 |
| RDWA-39-80V-210XT | 39 | 286 | 8.0 | 4.5 | 0.188 | 36.08 | 10 | 11 to 12.125 | 11.63 | 1 x 36 x 4 |
| RDWA-39-80H-210XT | 39 | 348 | 8.0 | 4.5 | 0.250 | 36.08 | 10 | 11 to 12.125 | 11.63 | 1 x 36 x 4 |
| RDWA-39-10V-210XT | 39 | 331 | 10.0 | 6.0 | 0.188 | 36.08 | 10 | 14.5 | 14.5 | 1 x 36 x 4 |
| RDWA-39-10H-210XT | 39 | 447 | 10.0 | 6.0 | 0.250 | 36.08 | 10 | 14.5 | 14.5 | 1.25 x 42 x 6 |
| RDWA-39-80V-212XT | 39 | 296 | 8.0 | 4.5 | 0.188 | 36.08 | 12 | 11 to 12.125 | 11.63 | 1 x 36 x 4 |
| RDWA-39-80H-212XT | 39 | 358 | 8.0 | 4.5 | 0.250 | 36.08 | 12 | 11 to 12.125 | 11.63 | 1 x 36 x 4 |
| RDWA-39-10V-212XT | 39 | 341 | 10.0 | 6.0 | 0.188 | 36.08 | 12 | 14.5 | 14.5 | 1 x 36 x 4 |
| RDWA-39-10H-212XT | 39 | 457 | 10.0 | 6.0 | 0.250 | 36.08 | 12 | 14.5 | 14.5 | 1.25 x 42 x 6 |
| RDWA-39-80V-215XT | 39 | 316 | 8.0 | 4.5 | 0.188 | 36.08 | 15 | 11 to 12.125 | 11.63 | 1 x 36 x 4 |
| RDWA-39-80H-215XT | 39 | 378 | 8.0 | 4.5 | 0.250 | 36.08 | 15 | 11 to 12.125 | 11.63 | 1 x 36 x 4 |
| RDWA-39-10V-215XT | 39 | 361 | 10.0 | 6.0 | 0.188 | 36.08 | 15 | 14.5 | 14.5 | 1 x 36 x 4 |
| RDWA-39-10H-215XT | 39 | 477 | 10.0 | 6.0 | 0.250 | 36.08 | 15 | 14.5 | 14.5 | 1.25 x 42 x 6 |

**Replace "X" with the Following:**
B - Bolt-mounted
C - Clamp-mounted

MAVERICK®
POLES AND STRUCTURE, LLC.

# Roadway – 2TA-Series (35' to 39' Mounting Heights)

## STRUCTURE LOADING CAPACITIES

| Catalog Number | Maximum Loading | | | | | | | | | |
|---|---|---|---|---|---|---|---|---|---|---|
| | 70 mph | | 80 mph | | 90 mph | | 100 mph | | 110 mph | |
| | EPA (ft2) | Wt. (lbs) | EPA (ft2) | Wt. (lbs) | EPA (ft2) | Wt. (lbs) | EPA (ft2) | Wt. (lbs) | EPA (ft2) | Wt. (lbs) |
| RDWA-35-80B-206XT | 3.9 | 98 | 2.1 | 53 | 1.2 | 30 | -- | --- | --- | --- |
| RDWA-35-80V-206XT | 5.8 | 145 | 3.5 | 88 | 2.2 | 55 | 1.3 | 33 | 0.7 | 18 |
| RDWA-35-80H-206XT | 7.1 | 178 | 6.2 | 155 | 4.4 | 110 | 3.1 | 78 | 2.1 | 53 |
| RDWA-35-10V-206XT | 7.1 | 178 | 7.1 | 178 | 6.6 | 165 | 4.7 | 118 | 3.4 | 85 |
| RDWA-35-80V-208XT | 3.6 | 90 | 1.5 | 38 | --- | --- | --- | --- | --- | --- |
| RDWA-35-80H-208XT | 5.3 | 133 | 3.8 | 95 | 2.4 | 60 | 1.1 | 28 | -- | --- |
| RDWA-35-10V-208XT | 5.3 | 133 | 3.8 | 95 | 2.8 | 70 | 2.0 | 50 | 1.3 | 33 |
| RDWA-35-80V-210XT | 5.1 | 128 | 2.9 | 73 | 1.6 | 40 | 0.7 | 18 | --- | --- |
| RDWA-35-80H-210XT | 7.1 | 178 | 5.5 | 138 | 3.6 | 90 | 2.5 | 63 | 1.4 | 35 |
| RDWA-35-10V-210XT | 7.1 | 178 | 7.1 | 178 | 5.9 | 148 | 4.1 | 103 | 2.7 | 68 |
| RDWA-35-10H-210XT | 7.1 | 178 | 7.1 | 178 | 6.8 | 170 | 5.5 | 138 | 4.6 | 115 |
| RDWA-35-80V-212XT | 4.7 | 118 | 2.6 | 65 | 1.4 | 35 | --- | --- | --- | --- |
| RDWA-35-80H-212XT | 7.1 | 178 | 5.3 | 133 | 3.4 | 85 | 2.1 | 53 | 1.2 | 30 |
| RDWA-35-10V-212XT | 7.1 | 178 | 6.9 | 173 | 5.1 | 128 | 3.8 | 95 | 2.5 | 63 |
| RDWA-35-10H-212XT | 7.1 | 178 | 6.9 | 173 | 5.1 | 128 | 3.9 | 98 | 3.2 | 80 |
| RDWA-35-80V-215XT | 4.0 | 100 | 2.0 | 50 | 0.7 | 18 | --- | --- | --- | --- |
| RDWA-35-80H-215XT | 6.8 | 170 | 4.6 | 115 | 2.7 | 68 | 1.5 | 38 | 0.6 | 15 |
| RDWA-35-10V-215XT | 6.8 | 170 | 4.8 | 120 | 3.6 | 90 | 2.7 | 68 | 1.8 | 45 |
| RDWA-39-80V-206XT | 3.9 | 98 | 2.1 | 53 | 1.1 | 28 | --- | --- | --- | --- |
| RDWA-39-80H-206XT | 6.9 | 173 | 4.5 | 113 | 2.9 | 73 | 1.9 | 48 | 1.1 | 28 |
| RDWA-39-10V-206XT | 7.1 | 178 | 7.1 | 178 | 4.9 | 123 | 3.3 | 83 | 2.1 | 53 |
| RDWA-39-10H-206XT | 7.1 | 178 | 7.1 | 178 | 7.1 | 178 | 5.8 | 145 | 4.1 | 103 |
| RDWA-39-80H-208XT | 4.8 | 120 | 2.4 | 60 | 0.9 | 23 | --- | --- | --- | -- |
| RDWA-39-10V-208XT | 5.3 | 133 | 3.8 | 95 | 2.8 | 70 | 1.3 | 33 | --- | --- |
| RDWA-39-10H-208XT | 5.3 | 133 | 3.8 | 95 | 2.8 | 70 | 2.0 | 50 | 1.5 | 38 |
| RDWA-39-80V-210XT | 3.2 | 80 | 1.4 | 35 | --- | --- | --- | --- | --- | --- |
| RDWA-39-80H-210XT | 6.2 | 155 | 3.8 | 95 | 2.2 | 55 | 1.2 | 30 | --- | --- |
| RDWA-39-10V-210XT | 7.1 | 178 | 6.4 | 160 | 4.2 | 105 | 2.7 | 68 | 1.5 | 38 |
| RDWA-39-10H-210XT | 7.1 | 178 | 7.1 | 178 | 6.8 | 170 | 5.1 | 128 | 3.5 | 88 |
| RDWA-39-80V-212XT | 2.9 | 73 | 1.2 | 30 | --- | --- | --- | --- | --- | --- |
| RDWA-39-80H-212XT | 5.9 | 148 | 3.5 | 88 | 2.0 | 50 | 0.9 | 23 | --- | --- |
| RDWA-39-10V-212XT | 7.1 | 178 | 6.0 | 150 | 4.0 | 100 | 2.5 | 63 | 1.3 | 33 |
| RDWA-39-10H-212XT | 7.1 | 178 | 6.9 | 173 | 5.1 | 128 | 3.9 | 98 | 3.2 | 80 |
| RDWA-39-80V-215XT | 2.2 | 55 | --- | --- | --- | --- | --- | --- | --- | --- |
| RDWA-39-80H-215XT | 5.2 | 130 | 2.8 | 70 | 1.3 | 33 | --- | --- | --- | --- |
| RDWA-39-10V-215XT | 6.8 | 170 | 4.8 | 120 | 3.3 | 83 | 1.8 | 45 | 0.6 | 15 |
| RDWA-39-10H-215XT | 6.8 | 170 | 4.8 | 120 | 3.6 | 90 | 2.7 | 68 | 2.1 | 53 |

**Replace "X" with the Following:**
B - Bolt-mounted
C - Clamp-mounted

MAVERICK®
POLES AND STRUCTURE, LLC.

# Roadway — 2TA-Series (25' to 30')

## FOUNDATIONS (25' to 30') RDWA-2TA

| Catalog Number | Foundation Data | | | | | | Anchor Bolt Data | |
|---|---|---|---|---|---|---|---|---|
| | Caisson Diameter (in) | Caisson Depth (ft) | Vert Rebar Qty | Vert Rebar Size | Concrete Volume (Cu Yds) | Steel Weight (lbs) | Dia x Lgth x Hk | Bolt Circle Range (in) |
| RDWA-25-60V-206XT | 24 | 5.00 | 8 | #6 | 0.58 | 75 | 0.75 x 17 x 3 | 8.75 to 10.25 |
| RDWA-25-70B-206XT | 24 | 5.00 | 8 | #6 | 0.58 | 75 | 1 x 36 x 4 | 9.875 to 11.25 |
| RDWA-25-80B-206XT | 24 | 5.00 | 8 | #6 | 0.58 | 75 | 1 x 36 x 4 | 11 to 12.125 |
| RDWA-25-80V-206XT | 24 | 5.00 | 8 | #6 | 0.58 | 75 | 1 x 36 x 4 | 11 to 12.125 |
| RDWA-25-70B-208XT | 24 | 5.00 | 8 | #6 | 0.58 | 75 | 1 x 36 x 4 | 9.875 to 11.25 |
| RDWA-25-80B-208XT | 24 | 5.00 | 8 | #6 | 0.58 | 75 | 1 x 36 x 4 | 11 to 12.125 |
| RDWA-25-80V-208XT | 24 | 5.00 | 8 | #6 | 0.58 | 75 | 1 x 36 x 4 | 11 to 12.125 |
| RDWA-25-70B-210XT | 24 | 5.00 | 8 | #6 | 0.58 | 75 | 1 x 36 x 4 | 9.875 to 11.25 |
| RDWA-25-80B-210XT | 24 | 5.00 | 8 | #6 | 0.58 | 75 | 1 x 36 x 4 | 11 to 12.125 |
| RDWA-25-80V-210XT | 24 | 5.00 | 8 | #6 | 0.58 | 75 | 1 x 36 x 4 | 11 to 12.125 |
| RDWA-25-80H-210XT | 24 | 5.00 | 8 | #6 | 0.58 | 75 | 1 x 36 x 4 | 11 to 12.125 |
| RDWA-25-70B-212XT | 24 | 5.00 | 8 | #6 | 0.58 | 75 | 1 x 36 x 4 | 9.875 to 11.25 |
| RDWA-25-80B-212XT | 24 | 5.00 | 8 | #6 | 0.58 | 75 | 1 x 36 x 4 | 11 to 12.125 |
| RDWA-25-80V-212XT | 24 | 5.00 | 8 | #6 | 0.58 | 75 | 1 x 36 x 4 | 11 to 12.125 |
| RDWA-25-80H-212XT | 24 | 5.00 | 8 | #6 | 0.58 | 75 | 1 x 36 x 4 | 11 to 12.125 |
| RDWA-25-70B-215XT | 24 | 5.00 | 8 | #6 | 0.58 | 75 | 1 x 36 x 4 | 9.875 to 11.25 |
| RDWA-25-80B-215XT | 24 | 5.00 | 8 | #6 | 0.58 | 75 | 1 x 36 x 4 | 11 to 12.125 |
| RDWA-25-80V-215XT | 24 | 5.00 | 8 | #6 | 0.58 | 75 | 1 x 36 x 4 | 11 to 12.125 |
| RDWA-30-80B-206XT | 24 | 6.00 | 8 | #6 | 0.70 | 91 | 1 x 36 x 4 | 11 to 12.125 |
| RDWA-30-80V-206XT | 24 | 6.00 | 8 | #6 | 0.70 | 91 | 1 x 36 x 4 | 11 to 12.125 |
| RDWA-30-80H-206XT | 24 | 6.00 | 8 | #6 | 0.70 | 91 | 1 x 36 x 4 | 11 to 12.125 |
| RDWA-30-70B-208XT | 24 | 6.00 | 8 | #6 | 0.70 | 91 | 1 x 36 x 4 | 9.875 to 11.25 |
| RDWA-30-80B-208XT | 24 | 6.00 | 8 | #6 | 0.70 | 91 | 1 x 36 x 4 | 11 to 12.125 |
| RDWA-30-80V-208XT | 24 | 6.00 | 8 | #6 | 0.70 | 91 | 1 x 36 x 4 | 11 to 12.125 |
| RDWA-30-80H-208XT | 24 | 6.00 | 8 | #6 | 0.70 | 91 | 1 x 36 x 4 | 11 to 12.125 |
| RDWA-30-10V-208XT | 30 | 6.00 | 8 | #6 | 1.09 | 98 | 1 x 36 x 4 | 14.50 |
| RDWA-30-70B-210XT | 24 | 6.00 | 8 | #6 | 0.70 | 91 | 1 x 36 x 4 | 9.875 to 11.25 |
| RDWA-30-80B-210XT | 24 | 6.00 | 8 | #6 | 0.70 | 91 | 1 x 36 x 4 | 11 to 12.125 |
| RDWA-30-80V-210XT | 24 | 6.00 | 8 | #6 | 0.70 | 91 | 1 x 36 x 4 | 11 to 12.125 |
| RDWA-30-80H-210XT | 24 | 6.00 | 8 | #6 | 0.70 | 91 | 1 x 36 x 4 | 11 to 12.125 |
| RDWA-30-10V-210XT | 30 | 6.00 | 8 | #6 | 1.09 | 98 | 1 x 36 x 4 | 14.50 |
| RDWA-30-80B-212XT | 24 | 6.00 | 8 | #6 | 0.70 | 91 | 1 x 36 x 4 | 11 to 12.125 |
| RDWA-30-80V-212XT | 24 | 6.00 | 8 | #6 | 0.70 | 91 | 1 x 36 x 4 | 11 to 12.125 |
| RDWA-30-80H-212XT | 24 | 6.00 | 8 | #6 | 0.70 | 91 | 1 x 36 x 4 | 11 to 12.125 |
| RDWA-30-10V-212XT | 30 | 6.00 | 8 | #6 | 1.09 | 98 | 1 x 36 x 4 | 14.5 |
| RDWA-30-80V-215XT | 24 | 6.00 | 8 | #6 | 0.70 | 91 | 1 x 36 x 4 | 11 to 12.125 |
| RDWA-30-80H-215XT | 24 | 6.00 | 8 | #6 | 0.70 | 91 | 1 x 36 x 4 | 11 to 12.125 |

Notes:

1. The above information is for estimating purposes only. Do not use for construction.
2. Analysis is based upon Brom's method of foundation design.
3. All of the designs are based upon the following soil parameters:
   a. Soil is homogeneous, non-cohesive
   b. $\phi$ = 30 degrees
   c. $\gamma$ = 110 pcf.
   d. Water table is below bottom of foundation.
   e. Site grade is 7H:1V or flatter.
4. Concrete 28 day compressive strength = 3000 psi.
5. Reinforcing meets the requirements of ASTM A615 grade 60.
6. Concrete design is in accordance with ACI 318-95.
7. Concrete is cast against undisturbed soil.
8. All reinforcing must be covered by a minimum of 3" of concrete on all sides.
9. All vertical reinforcing bars are equally spaced.
10. #4 reinforcing bars are used as hoops and are spaced on 12" centers.

NOT FOR CONSTRUCTION.
FOR ESTIMATION ONLY.

*The information above is provided for preliminary estimating use only and may not be used as final or construction designs.*

MAVERICK®
POLES AND STRUCTURE, LLC.

# Roadway — 2TA-Series (35' to 39')

## FOUNDATIONS (35' to 39') RDWA-2TA

| Catalog Number | Foundation Data | | | | | | Anchor Bolt Data | |
|---|---|---|---|---|---|---|---|---|
| | Caisson Diameter (in) | Caisson Depth (ft) | Vert Rebar Qty | Vert Rebar Size | Concrete Volume (Cu Yds) | Steel Weight (lbs) | Dia x Lgth x Hk | Bolt Circle Range (in) |
| RDWA-35-80V-206XT | 24 | 7.00 | 10 | #6 | 0.81 | 127 | 1 x 36 x 4 | 11 to 12.125 |
| RDWA-35-80H-206XT | 24 | 7.00 | 10 | #6 | 0.81 | 127 | 1 x 36 x 4 | 11 to 12.125 |
| RDWA-35-10V-206XT | 30 | 7.00 | 10 | #6 | 1.27 | 134 | 1 x 36 x 4 | 14.5 |
| RDWA-35-80V-208XT | 24 | 7.00 | 10 | #6 | 0.81 | 127 | 1 x 36 x 4 | 11 to 12.125 |
| RDWA-35-80H-208XT | 24 | 7.00 | 10 | #6 | 0.81 | 127 | 1 x 36 x 4 | 11 to 12.125 |
| RDWA-35-10V-208XT | 30 | 7.00 | 10 | #6 | 1.27 | 134 | 1 x 36 x 4 | 14.5 |
| RDWA-35-10H-208XT | 30 | 7.00 | 10 | #6 | 1.27 | 134 | 1 x 36 x 4 | 14.5 |
| RDWA-35-80V-210XT | 24 | 7.00 | 10 | #6 | 0.81 | 127 | 1 x 36 x 4 | 11 to 12.125 |
| RDWA-35-80H-210XT | 24 | 7.00 | 10 | #6 | 0.81 | 127 | 1 x 36 x 4 | 11 to 12.125 |
| RDWA-35-10V-210XT | 30 | 7.00 | 10 | #6 | 1.27 | 134 | 1 x 36 x 4 | 14.5 |
| RDWA-35-10H-210XT | 30 | 7.00 | 10 | #6 | 1.27 | 134 | 1.25 x 42 x 6 | 14.5 |
| RDWA-35-80V-212XT | 24 | 7.00 | 10 | #6 | 0.81 | 127 | 1 x 36 x 4 | 11 to 12.125 |
| RDWA-35-80H-212XT | 24 | 7.00 | 10 | #6 | 0.81 | 127 | 1 x 36 x 4 | 11 to 12.125 |
| RDWA-35-10V-212XT | 30 | 7.00 | 10 | #6 | 1.27 | 134 | 1 x 36 x 4 | 14.5 |
| RDWA-35-10H-212XT | 30 | 7.00 | 10 | #6 | 1.27 | 134 | 1.25 x 42 x 6 | 14.5 |
| RDWA-35-80V-215XT | 24 | 7.00 | 10 | #6 | 0.81 | 127 | 1 x 36 x 4 | 11 to 12.125 |
| RDWA-35-80H-215XT | 24 | 7.00 | 10 | #6 | 0.81 | 127 | 1 x 36 x 4 | 11 to 12.125 |
| RDWA-35-10V-215XT | 30 | 7.00 | 10 | #6 | 1.27 | 134 | 1 x 36 x 4 | 14.5 |
| RDWA-39-80V-206XT | 24 | 8.00 | 12 | #6 | 0.93 | 169 | 1 x 36 x 4 | 11 to 12.125 |
| RDWA-39-80H-206XT | 24 | 8.00 | 12 | #6 | 0.93 | 169 | 1 x 36 x 4 | 11 to 12.125 |
| RDWA-39-10V-206XT | 30 | 8.00 | 12 | #6 | 1.45 | 177 | 1 x 36 x 4 | 14.5 |
| RDWA-39-10H-206XT | 30 | 8.00 | 12 | #6 | 1.45 | 177 | 1.25 x 42 x 6 | 14.5 |
| RDWA-39-80V-208XT | 24 | 8.00 | 12 | #6 | 0.93 | 169 | 1 x 36 x 4 | 11 to 12.125 |
| RDWA-39-80H-208XT | 24 | 8.00 | 12 | #6 | 0.93 | 169 | 1 x 36 x 4 | 11 to 12.125 |
| RDWA-39-10V-208XT | 30 | 8.00 | 12 | #6 | 1.45 | 177 | 1 x 36 x 4 | 14.5 |
| RDWA-39-10H-208XT | 30 | 8.00 | 12 | #6 | 1.45 | 177 | 1.25 x 42 x 6 | 14.5 |
| RDWA-39-80V-210XT | 24 | 8.00 | 12 | #6 | 0.93 | 169 | 1 x 36 x 4 | 11 to 12.125 |
| RDWA-39-80H-210XT | 24 | 8.00 | 12 | #6 | 0.93 | 169 | 1 x 36 x 4 | 11 to 12.125 |
| RDWA-39-10V-210XT | 30 | 8.00 | 12 | #6 | 1.45 | 177 | 1 x 36 x 4 | 14.5 |
| RDWA-39-10H-210XT | 30 | 8.00 | 12 | #6 | 1.45 | 177 | 1.25 x 42 x 6 | 14.5 |
| RDWA-39-80V-212XT | 24 | 8.00 | 12 | #6 | 0.93 | 169 | 1 x 36 x 4 | 11 to 12.125 |
| RDWA-39-80H-212XT | 24 | 8.00 | 12 | #6 | 0.93 | 169 | 1 x 36 x 4 | 11 to 12.125 |
| RDWA-39-10V-212XT | 30 | 8.00 | 12 | #6 | 1.45 | 177 | 1 x 36 x 4 | 14.5 |
| RDWA-39-10H-212XT | 30 | 8.00 | 12 | #6 | 1.45 | 177 | 1.25 x 42 x 6 | 14.5 |
| RDWA-39-80V-215XT | 24 | 8.00 | 12 | #6 | 0.93 | 169 | 1 x 36 x 4 | 11 to 12.125 |
| RDWA-39-80H-215XT | 24 | 8.00 | 12 | #6 | 0.93 | 169 | 1 x 36 x 4 | 11 to 12.125 |
| RDWA-39-10V-215XT | 30 | 8.00 | 12 | #6 | 1.45 | 177 | 1 x 36 x 4 | 14.5 |
| RDWA-39-10H-215XT | 30 | 8.00 | 12 | #6 | 1.45 | 177 | 1.25 x 42 x 6 | 14.5 |

Notes:

1. The above information is for estimating purposes only. Do not use for construction.
2. Analysis is based upon Brom's method of foundation design.
3. All of the designs are based upon the following soil parameters:
   a. Soil is homogeneous, non-cohesive
   b. $\phi$ = 30 degrees
   c. $\gamma$ = 110 pcf.
   d. Water table is below bottom of foundation.
   e. Site grade is 7H:1V or flatter.
4. Concrete 28 day compressive strength = 3000 psi.
5. Reinforcing meets the requirements of ASTM A615 grade 60.
6. Concrete design is in accordance with ACI 318-95.
7. Concrete is cast against undisturbed soil.
8. All reinforcing must be covered by a minimum of 3" of concrete on all sides.
9. All vertical reinforcing bars are equally spaced.
10. #4 reinforcing bars are used as hoops and are spaced on 12" centers.

NOT FOR CONSTRUCTION.
FOR ESTIMATION ONLY.

*The information above is provided for preliminary estimating use only and may not be used as final or construction designs.*

MAVERICK®
POLES AND STRUCTURE, LLC.

# Roadway — 2TA-Series

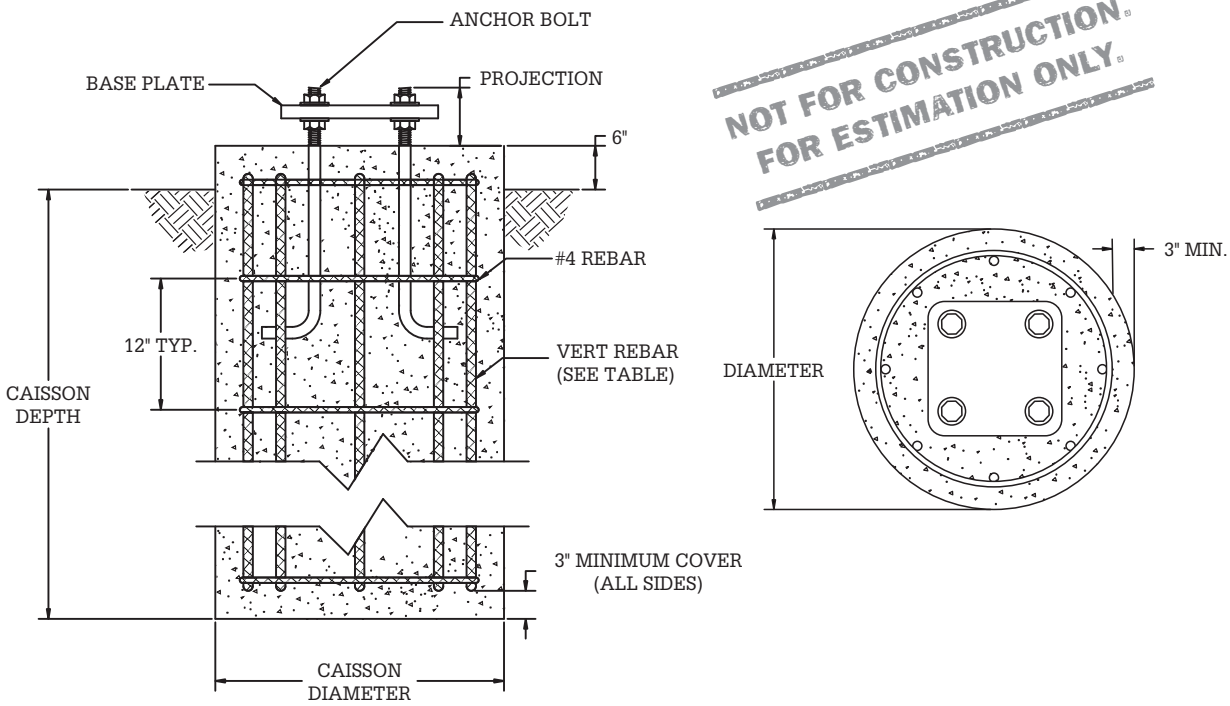


1. SEE TABLE FOR ACTUAL BOLT QUANTITY, BOLTS AND REBAR QUANTITIES SHOWN ARE FOR ILLUSTRATION PURPOSES ONLY.

*The information above is provided for preliminary estimating use only and may not be used as final or construction designs.*

MAVERICK®
POLES AND STRUCTURE, LLC.

# Round Top-Mount Bullhorn Brackets

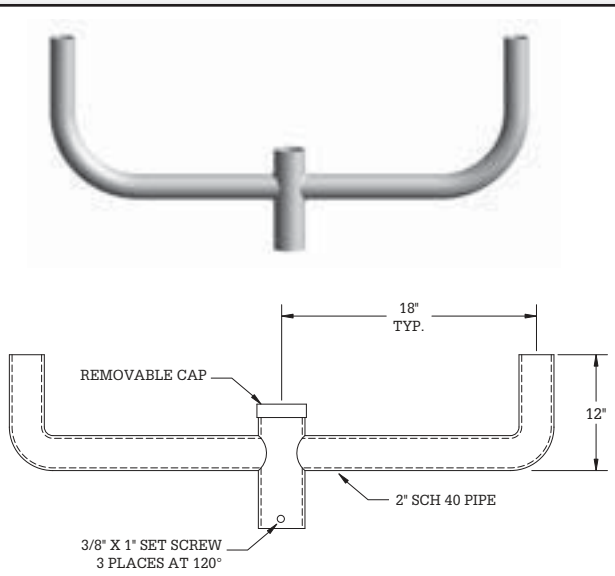


**BHR-218-A**

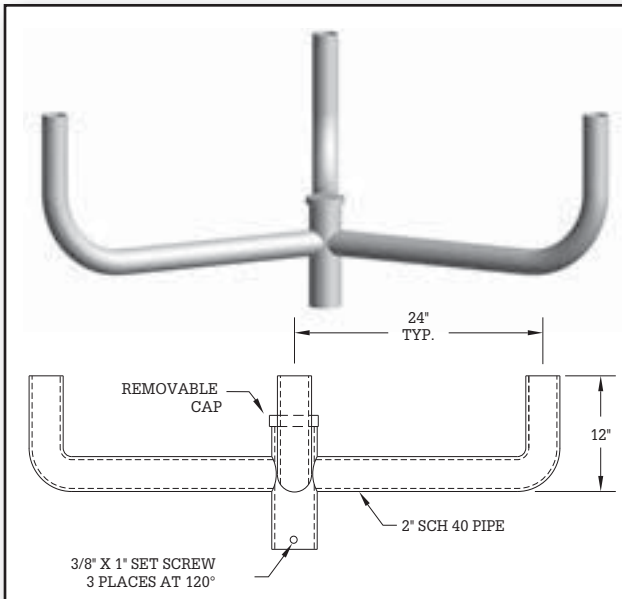


**BHR-312-A**

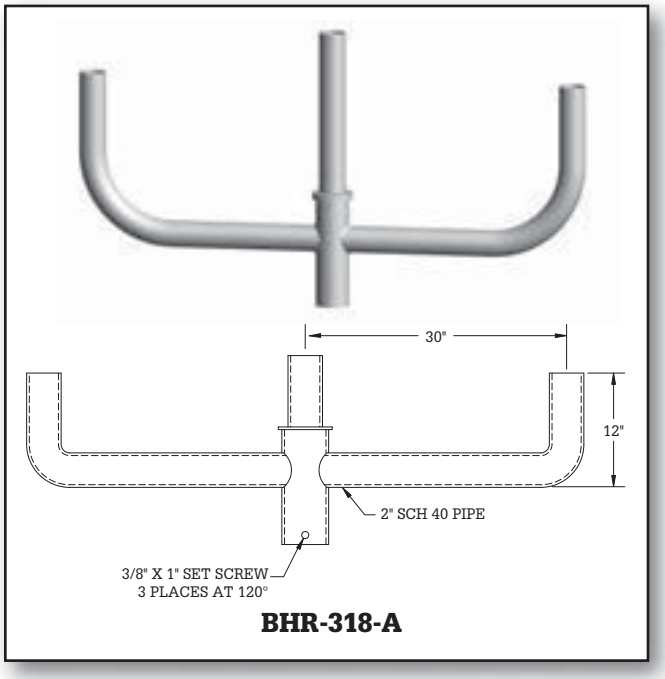


**BHR-318-A**

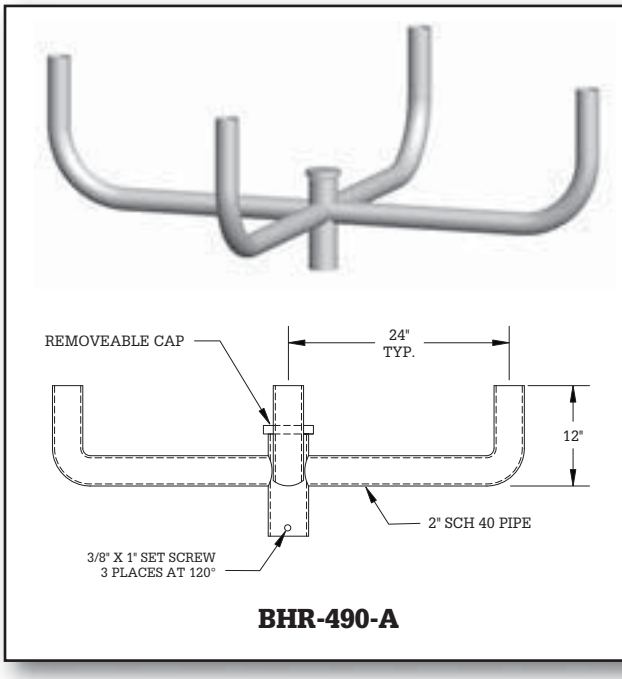


**BHR-490-A**

**Note:** Bracket hubs slip-fit 3”, 4”, 4.5” and 6” pole tops or tenons.

## Round Top-Mount Bullhorn Brackets

| Catalog Number | No. Fix | EPA ($ft^2$) | Weight (lbs) | Max. Wt. Load per Tenon (lbs) | Max. EPA Load per Tenon ($ft^2$) |
|---|---|---|---|---|---|
| BHR-218-A | 2 | 1.35 | 9 | 100 | 5.3 |
| BHR-318-A | 3 | 2.00 | 12 | 100 | 4.4 |
| BHR-312-A | 3 | 1.48 | 13 | 100 | 4.8 |
| BHR-490-A | 4 | 1.79 | 17 | 100 | 4.8 |

MAVERICK®
POLES AND STRUCTURE, LLC.

# Round Top-Mount Bullhorn Brackets

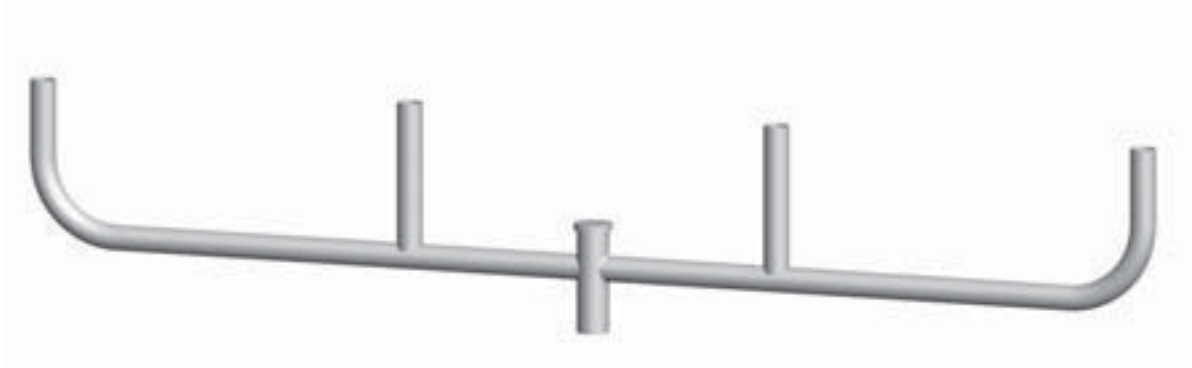

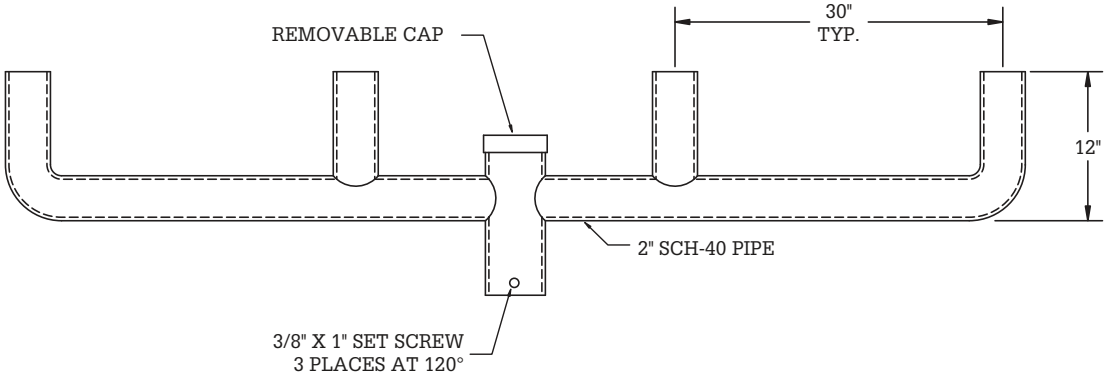


**BHR-418-A**

## Round Top-Mount Bullhorn Brackets

| Catalog Number | No. Fix | EPA ($ft^2$) | Weight (lbs) | Max. Wt. Load per Tenon (lbs) | Max. EPA Load per Tenon ($ft^2$) |
|---|---|---|---|---|---|
| BHR-418-A | 4 | 2.54 | 15 | 100 | 2.2 |

**Note:** Bracket hubs slip-fit 3”, 4”, 4.5” and 6” pole tops or tenons.

MAVERICK®
POLES AND STRUCTURE, LLC.

# Round Top-Mount Bullhorn Brackets

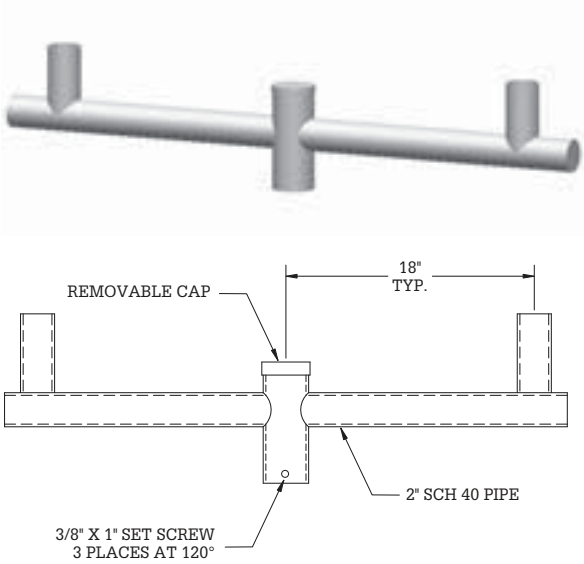


**BHR-218ST-A**

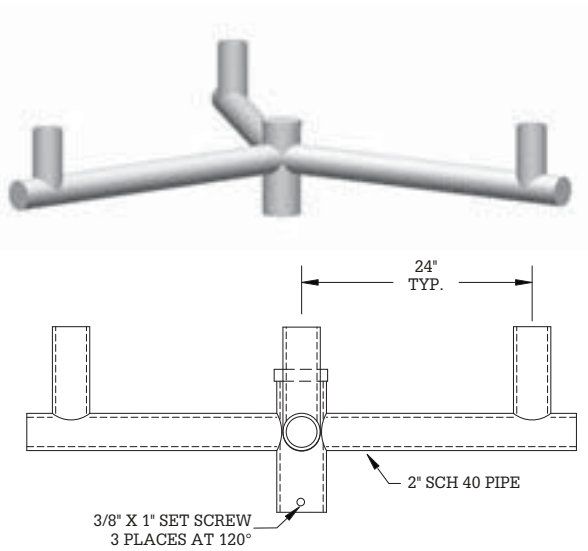


**BHR-312ST-A**

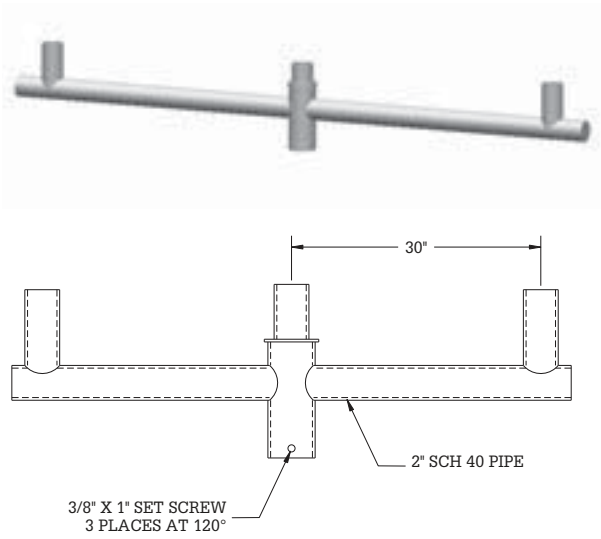


**BHR-318ST-A**

## Round Top-Mount Bullhorn Brackets

| Catalog Number | No. Fix | EPA ($ft^2$) | Weight (lbs) | Max. Wt. Load per Tenon (lbs) | Max. EPA Load per Tenon ($ft^2$) |
|---|---|---|---|---|---|
| BHR-218ST-A | 2 | 1.24 | 7 | 100 | 5.3 |
| BHR-312ST-A | 3 | 1.43 | 13 | 100 | 4.8 |
| BHR-318ST-A | 3 | 1.79 | 11 | 100 | 4.4 |

**Note:** Bracket hubs slip-fit 3”, 4”, 4.5” and 6” pole tops or tenons.

MAVERICK®
POLES AND STRUCTURE, LLC.

# Round Top-Mount Bullhorn Brackets

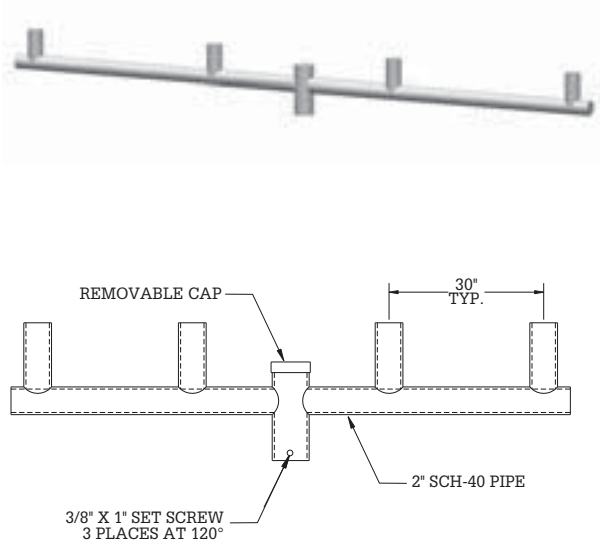


**BHR-418ST-A**

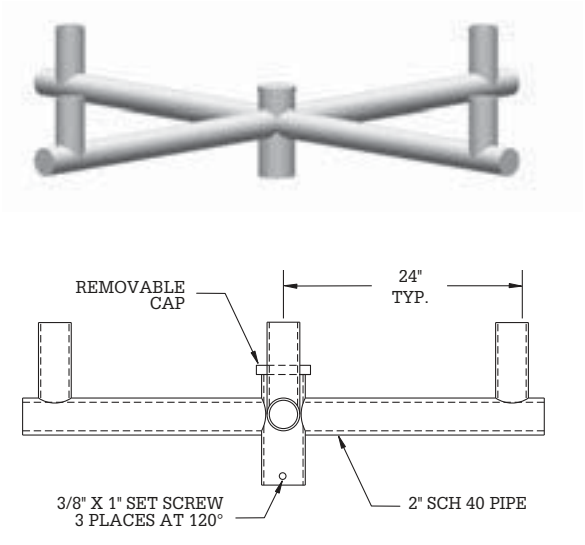


**BHR-490ST-A**

**Note:** Bracket hubs slip-fit 3”, 4”, 4.5” and 6” pole tops or tenons.

## Round Top-Mount Bullhorn Brackets

| Catalog Number | No. Fix | EPA ($ft^2$) | Weight (lbs) | Max. Wt. Load per Tenon (lbs) | Max. EPA Load per Tenon ($ft^2$) |
|---|---|---|---|---|---|
| BHR-418ST-A | 4 | 2.46 | 15 | 50 | 2.75 |
| BHR-490ST-A | 4 | 1.55 | 17 | 100 | 6.0 |

MAVERICK®
POLES AND STRUCTURE, LLC.

# Square Top-Mount Bullhorn Brackets

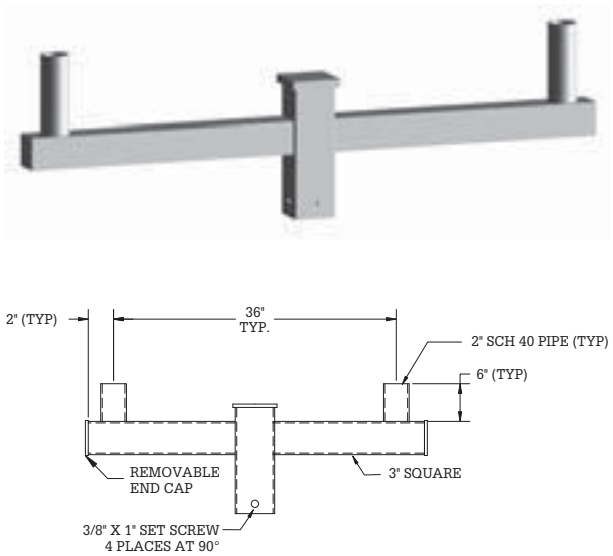


**BHS-218-A**

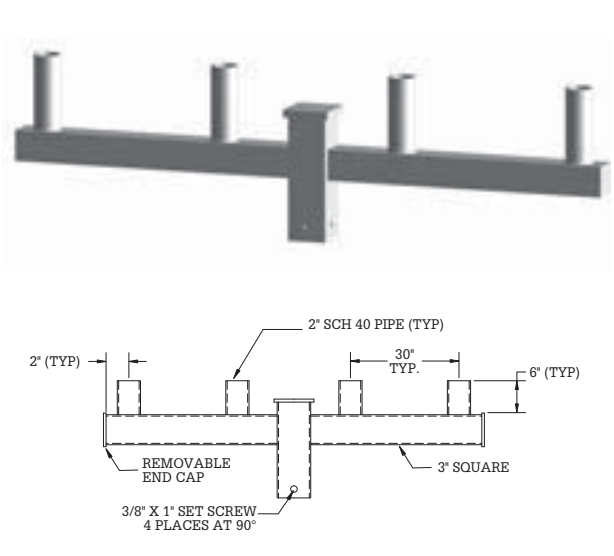


**BHS-418-A**

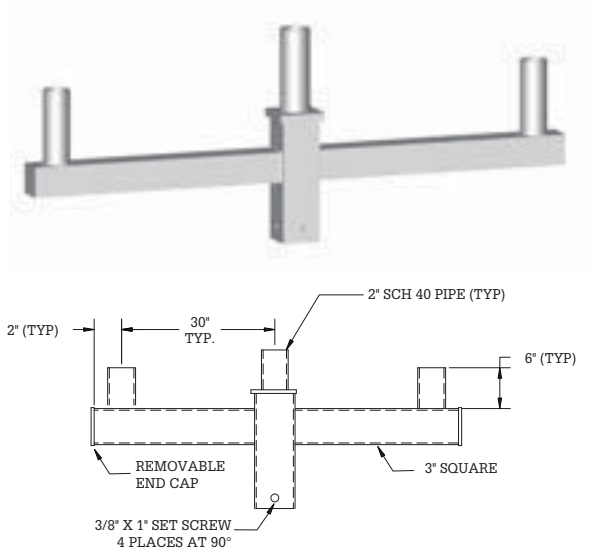


**BHS-318-A**

## Square Top-Mount Bullhorn Brackets

| Catalog Number | No. Fix | EPA ($ft^2$) | Weight (lbs) | Max. Wt. Load per Tenon (lbs) | Max. EPA Load per Tenon ($ft^2$) |
|---|---|---|---|---|---|
| BHS-218-A | 2 | 2.13 | 8.3 | 100 | 6.0 |
| BHS-318-A | 3 | 2.91 | 9.5 | 100 | 6.0 |
| BHS-418-A | 4 | 4.05 | 17 | 75 | 4.0 |

**Note:** Bracket hubs slip-fit 4”, 5” and 6” square poles.

MAVERICK®
POLES AND STRUCTURE, LLC.

# Square Top-Mount Bullhorn Brackets

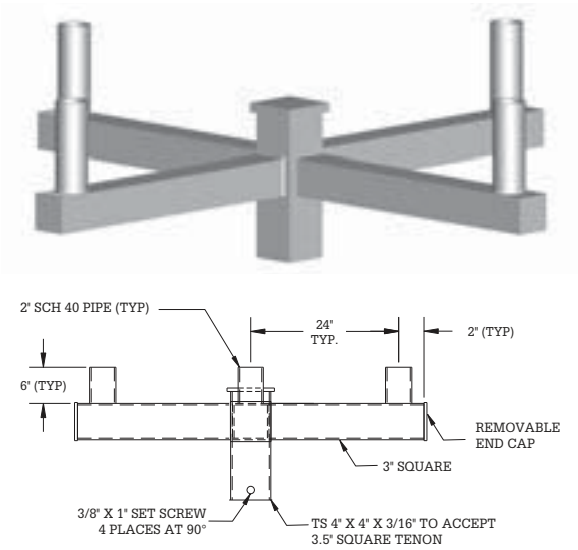


**BHS-490-A**

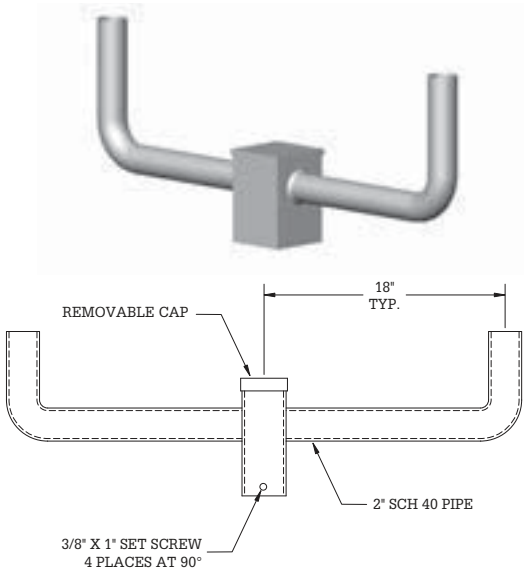


**BHS-218SPL-A**

## Square Top-Mount Bullhorn Brackets

| Catalog Number | No. Fix | EPA ($ft^2$) | Weight (lbs) | Max. Wt. Load per Tenon (lbs) | Max. EPA Load per Tenon ($ft^2$) |
|---|---|---|---|---|---|
| SPS-490-A | 4 | 1.70 | 13.6 | 100 | 6.0 |
| BHS-218SPL-A | 2 | 0.80 | 14.0 | 100 | 5.3 |

**Note:** Bracket hubs slip-fit 4", 5" and 6" square poles.

MAVERICK®
POLES AND STRUCTURE, LLC.

# Round Side-Mount Bullhorn Brackets

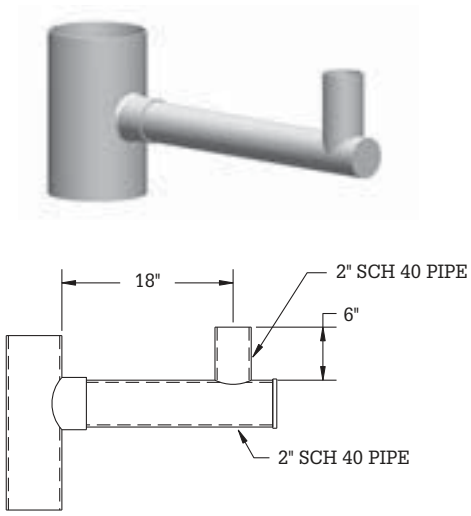


**SMR-1T238-A**

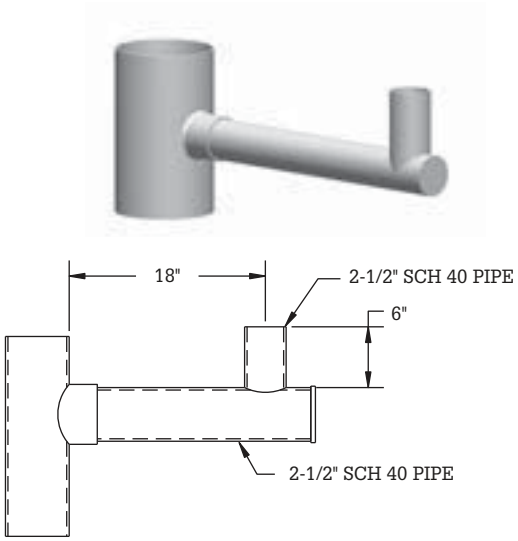


**SMR-1T278-A**

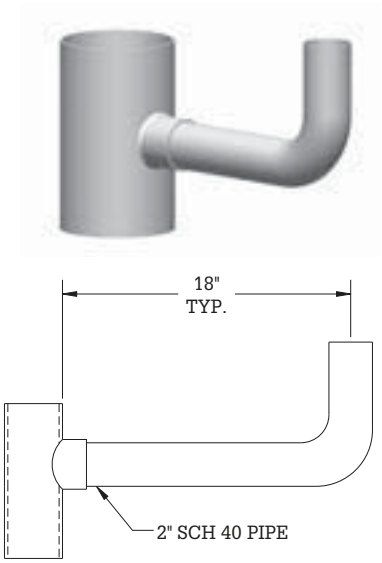


**SMR-1BH-A**

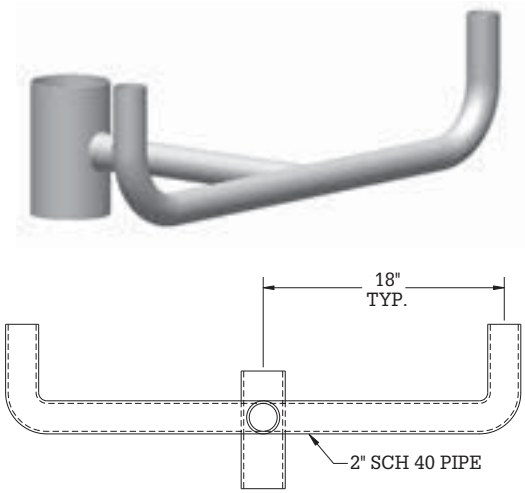


**SMR-2BH-A**

## Round Side-Mount Bullhorn Brackets

| Catalog Number | No. Fix | EPA ($ft^2$) | Weight (lbs) | Max. Wt. Load per Tenon (lbs) | Max. EPA Load per Tenon ($ft^2$) |
|---|---|---|---|---|---|
| SMR-1T238-A | 1 | 0.43 | 7.2 | 100 | 3.5 |
| SMR-1T278-A | 1 | 0.43 | 11 | 100 | 3.5 |
| SMR-1BH-A | 1 | 0.47 | 7 | 100 | 3.5 |
| SMR-2BH-A | 2 | 1.00 | 15.6 | 60 | 3.5 |

MAVERICK®
POLES AND STRUCTURE, LLC.

# Round Top-Mount Spoke Arm Brackets

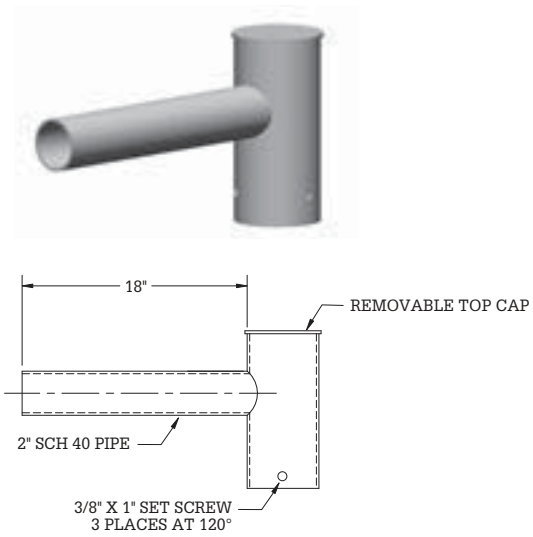


**SPR-118-A**

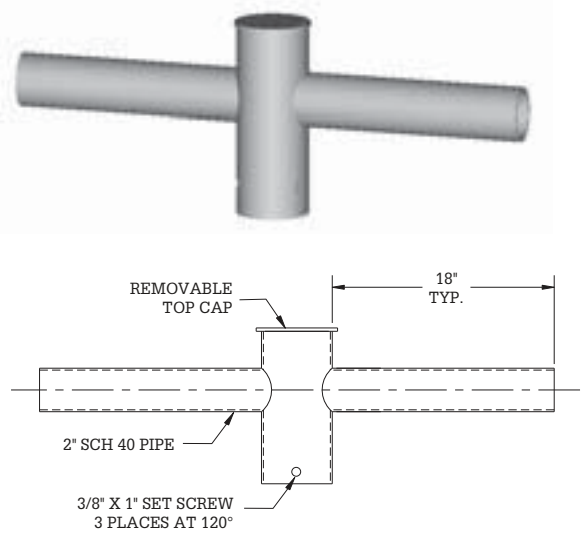


**SPR-218-A**

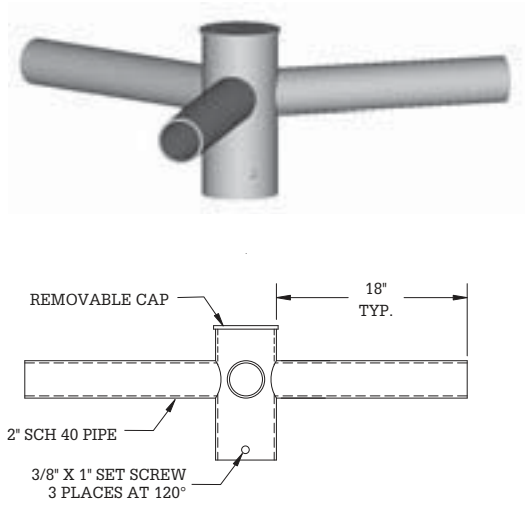


**SPR-312-A**

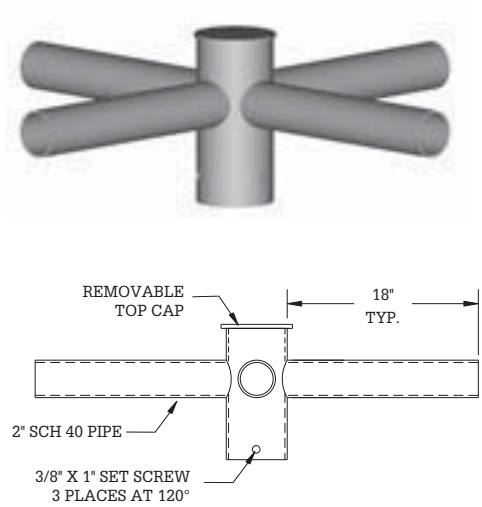


**SPR-490-A**

## Round Top-Mount Spoke Arm Brackets

| Catalog Number | No. Fix | EPA ($ft^2$) | Weight (lbs) | Max. Wt. Load per Tenon (lbs) | Max. EPA Load per Tenon ($ft^2$) |
|---|---|---|---|---|---|
| SPR-118-A | 1 | 0.59 | 6 | 100 | 6.0 |
| SPR-218-A | 2 | 0.92 | 8 | 100 | 6.0 |
| SPR-312-A | 3 | 0.83 | 11 | 100 | 6.0 |
| SPR-490-A | 4 | 0.92 | 15 | 100 | 6.0 |

**Note:** Bracket hubs slip-fit 3”, 4”, 4.5” and 6” pole tops or tenons.

MAVERICK®
POLES AND STRUCTURE, LLC.

# Square Top-Mount Spoke Arm Brackets

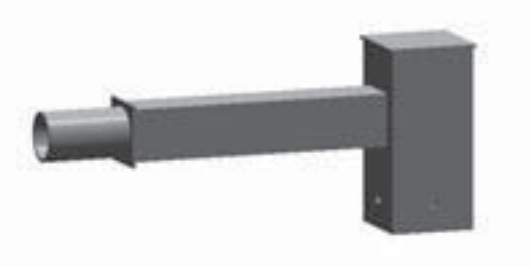

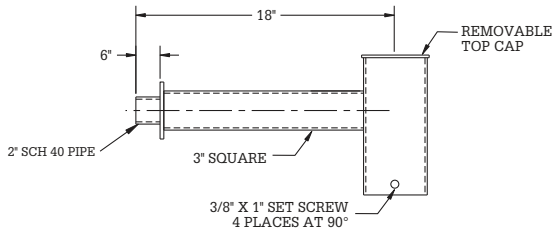


**SPS-118-A**

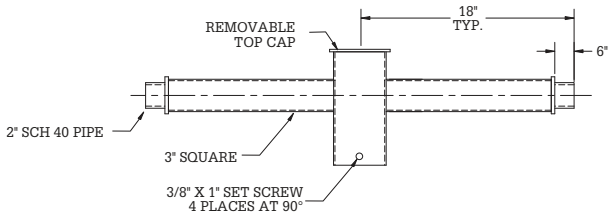


**SPS-218-A**

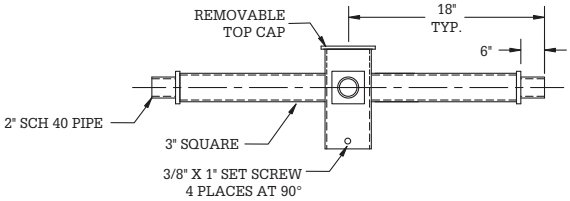


**SPS-490-A**

## Square Top-Mount Spoke-Arm Brackets

| Catalog Number | No. Fix | EPA ($ft^2$) | Weight (lbs) | Max. Wt. Load per Tenon (lbs) | Max. EPA Load per Tenon ($ft^2$) |
|---|---|---|---|---|---|
| SPS-118-A | 1 | 1.14 | 5.70 | 100 | 6.0 |
| SPS-218-A | 2 | 1.70 | 8.30 | 100 | 6.0 |
| SPS-490-A | 4 | 1.70 | 13.6 | 100 | 6.0 |

**Note:** Brackets flush-mount on 4”, 5”, and 6” square poles.

MAVERICK®
POLES AND STRUCTURE, LLC.

# Round Side-Mount Brackets

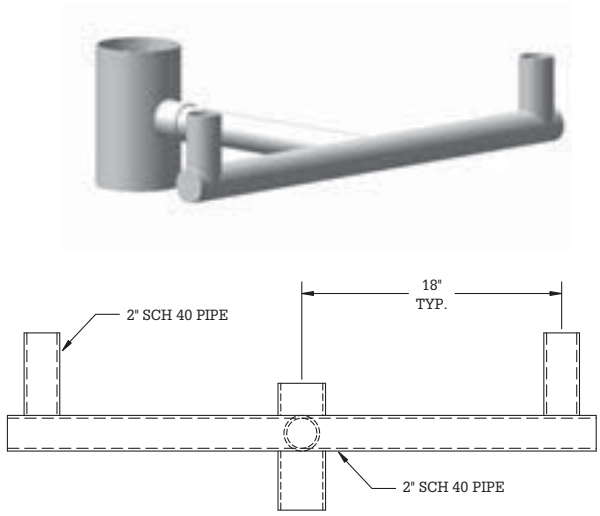


**SMR-2T238-A**

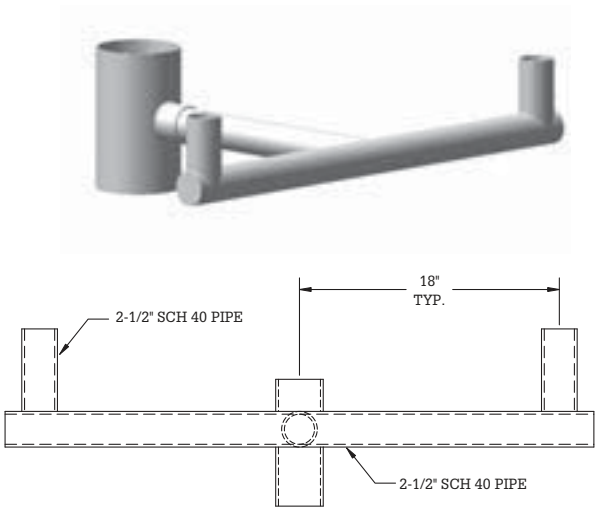


**SMR-2T278-A**

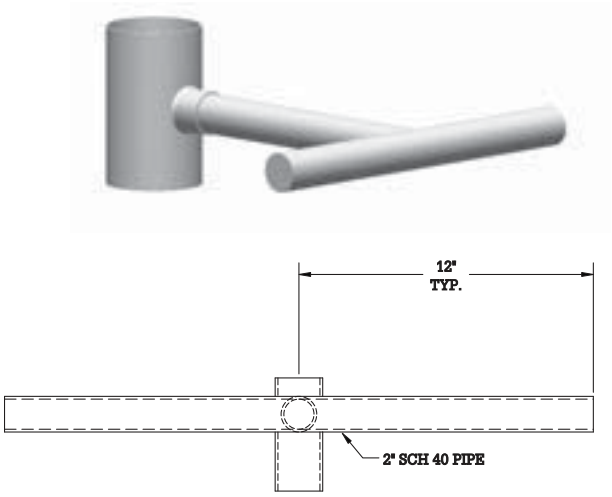


**SMR-2SP238-A**

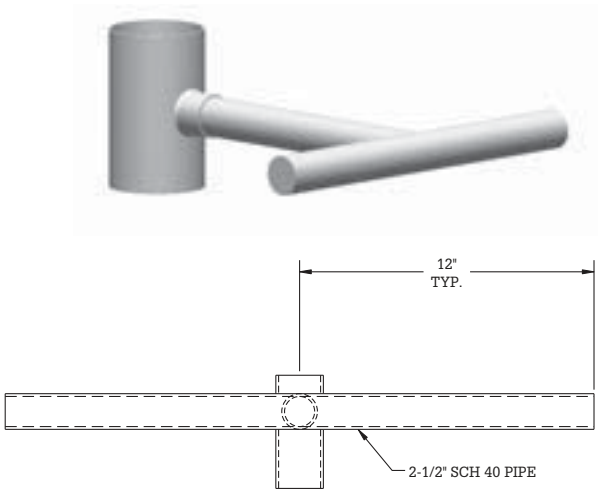


**SMR-2SP278-A**

## Round Side-Mount Brackets

| Catalog Number | No. Fix | EPA ($ft^2$) | Weight (lbs) | Max. Wt. Load per Tenon (lbs) | Max. EPA Load per Tenon ($ft^2$) |
|---|---|---|---|---|---|
| SMR-2T238-A | 2 | 0.78 | 16 | 60 | 3.5 |
| SMR-2T278-A | 2 | 0.78 | 26 | 60 | 3.5 |
| SMR-2SP238-A | 2 | 0.65 | 13.4 | 60 | 3.5 |
| SPR-2SP278-A | 2 | 0.65 | 22.2 | 60 | 3.5 |

MAVERICK®
POLES AND STRUCTURE, LLC.

# Round Side-Mount Brackets

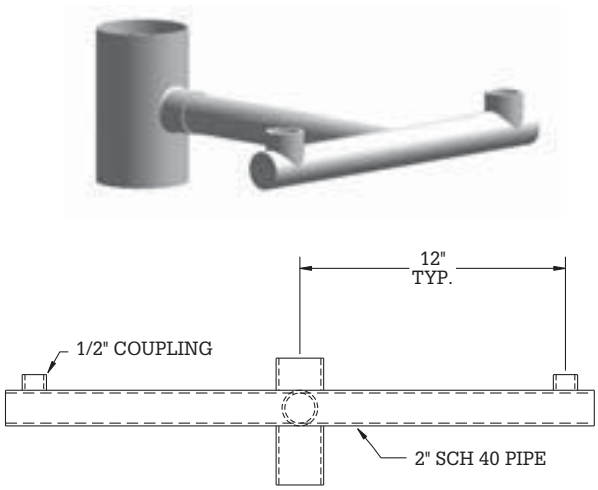


**SMR-2C12-A**

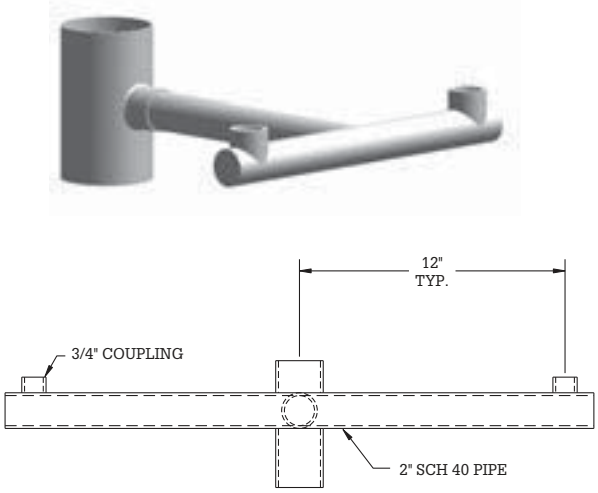


**SMR-2C34-A**

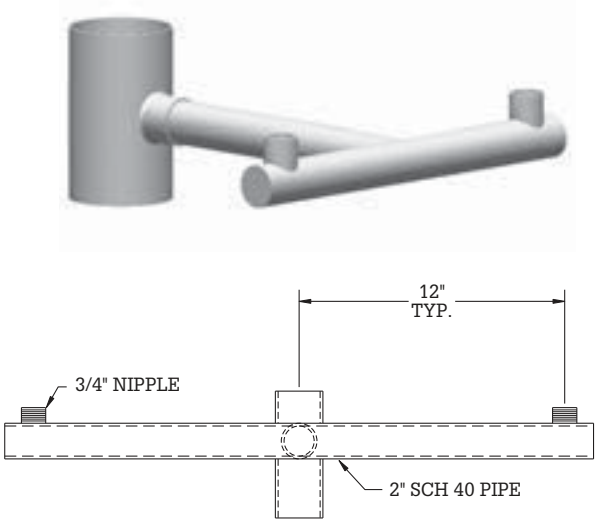


**SMR-2N34-A**

## Round Side-Mount Brackets

| Catalog Number | No. Fix | EPA ($ft^2$) | Weight (lbs) | Max. Wt. Load per Tenon (lbs) | Max. EPA Load per Tenon ($ft^2$) |
|---|---|---|---|---|---|
| SMR-2C12-A | 2 | .65 | 10.0 | 35 | 2.25 |
| SMR-2C34-A | 2 | .65 | 15.6 | 50 | 3.50 |
| SMR-2N34-A | 2 | .65 | 10.0 | 25 | 1.50 |

MAVERICK®
POLES AND STRUCTURE, LLC.

# Tenons

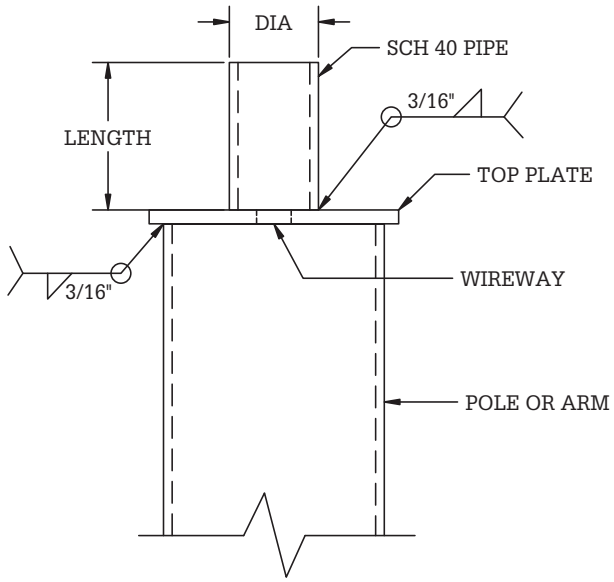

**ROUND TENON**

## Round Tenon Sizes

| DIA. (IN) | LENGTH (IN) |
|---|---|
| 2.375 | 5.5 |
| 2.875 | 5.5 |
| 4.000 | 5.5 |
| 4.500 | 5.5 |

MAVERICK®
POLES AND STRUCTURE, LLC.

# Hand Holes

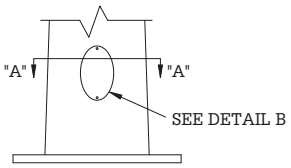


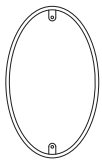

DETAIL B

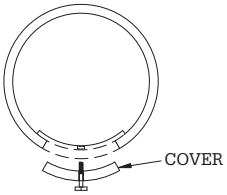


SECTION "A"-"A"

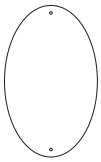

HANDHOLE COVER

**HH-XXX-RD-A**

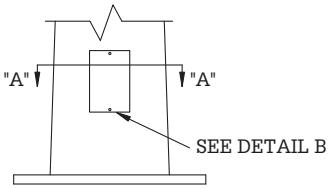


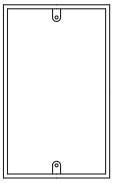

DETAIL B

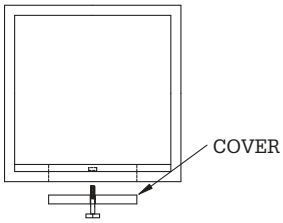


SECTION "A"-"A"

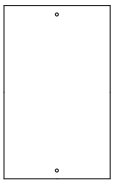

HANDHOLE COVER

**HH-XXX-SQ-A**

## Standard Hand Holes

| Catalog Number | "X" (in) | "Y" (in) |
|---|---|---|
| HH-2345-RD-A | 2.375 | 4.5 |
| HH-0305-RD-A | 3.000 | 5.0 |
| HH-0406-RD-A | 4.0 | 6.0 |
| HH-0408-RD-A | 4.0 | 8.0 |
| HH-0204-SQ-A | 2.0 | 4.0 |
| HH-0205-SQ-A | 2.5 | 4.0 |

MAVERICK®
POLES AND STRUCTURE, LLC.

# *Electrical Provisions*

**FESTOON BOX**

**FSTN-01**

**DUPLEX RECEPTACLE**

***DPLX-01**

**GFI RECEPTACLE**

***DGFI-01**

* 125 Volts, 15 AMPS

MAVERICK®
POLES AND STRUCTURE, LLC.

# Transformer Bases

**TB1-AF-17**

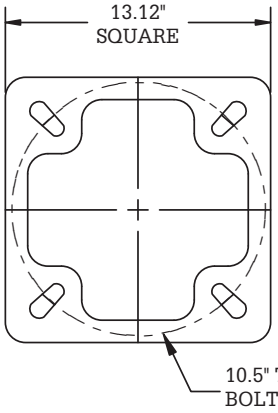


TOP PLAN VIEW

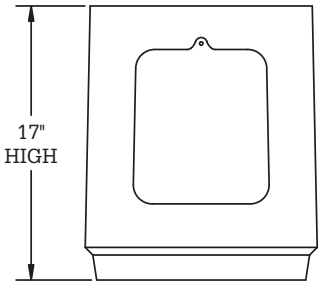


ELEVATION VIEW

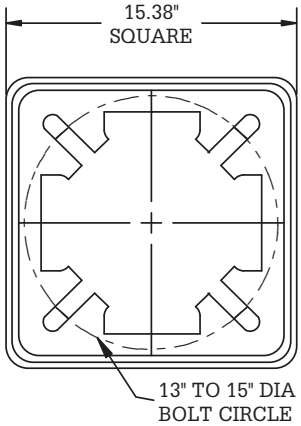


BOTTOM PLAN VIEW

**TB2-AF-17**

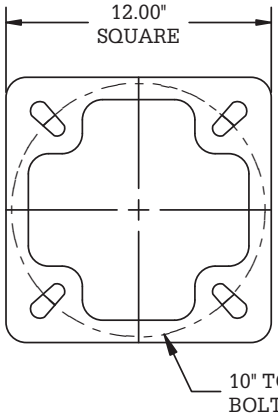


TOP PLAN VIEW

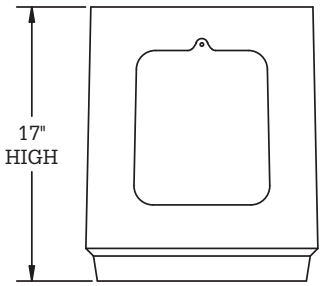


ELEVATION VIEW

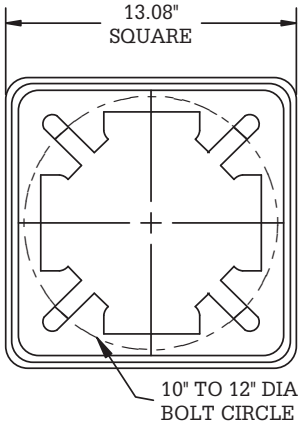


BOTTOM PLAN VIEW

**TB3-AF-17**

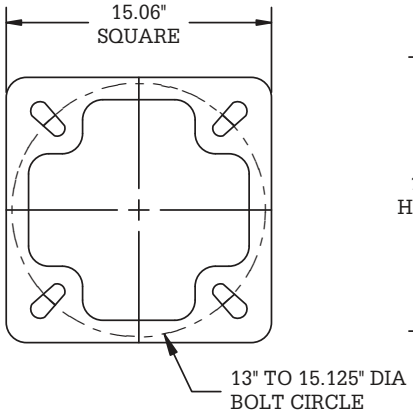


TOP PLAN VIEW

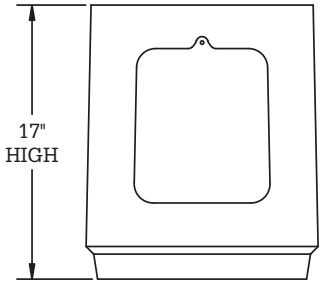


ELEVATION VIEW

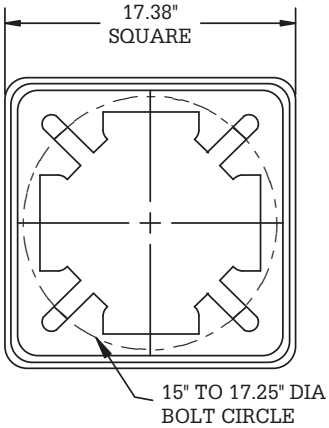


BOTTOM PLAN VIEW



MAVERICK®
POLES AND STRUCTURE, LLC.

# Transformer Bases

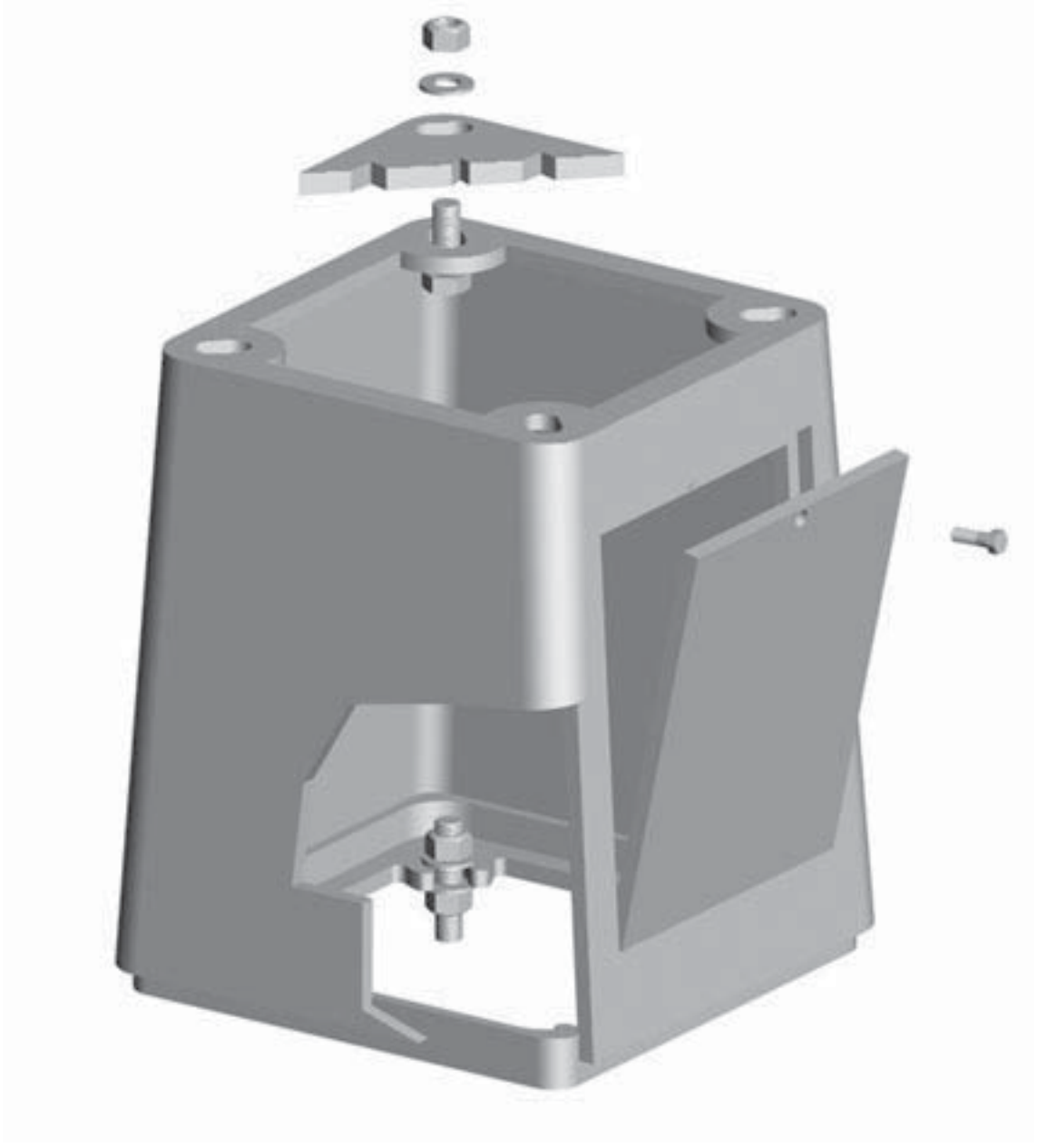

MAVERICK®
POLES AND STRUCTURE, LLC.

# Base Covers

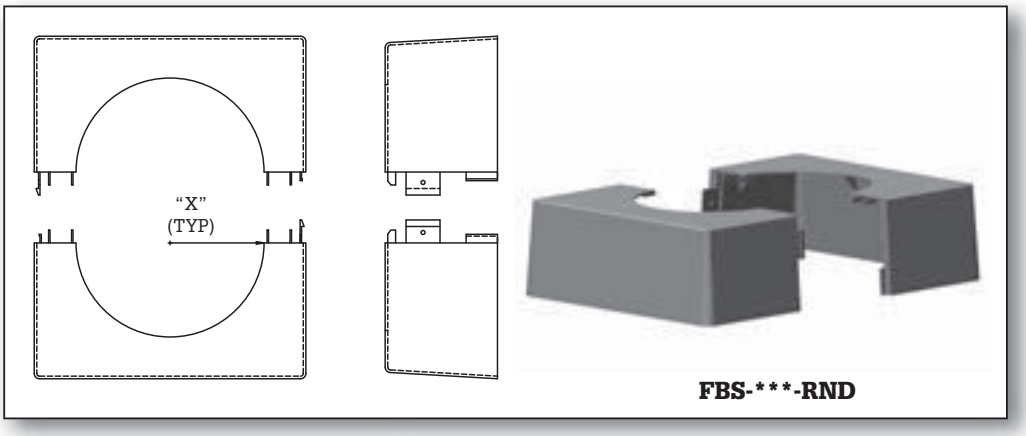


FBS-***-RND

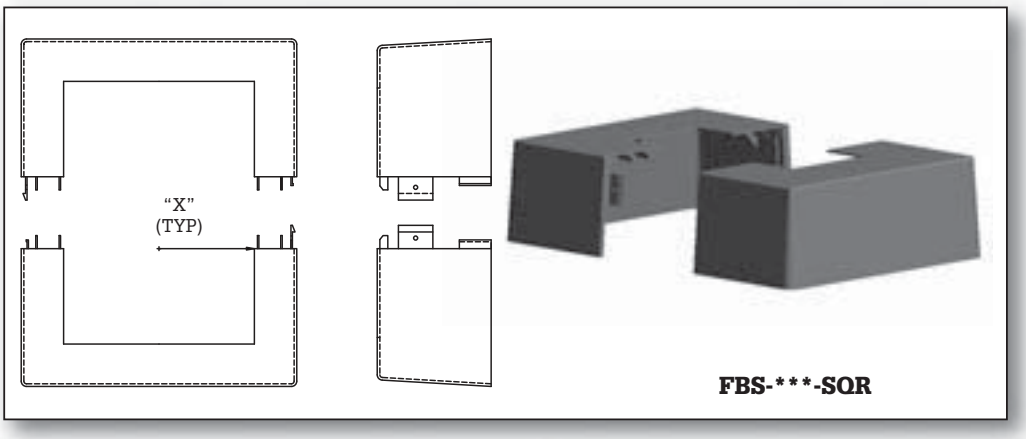


FBS-***-SQR

## Full Base Covers

| Catalog No. | "X" Dim (in) |
|---|---|
| FBS-400-RND | 2.00 |
| FBS-500-RND | 2.50 |
| FBS-600-RND | 3.00 |
| FBS-700-RND | 3.50 |
| FBS-800-RND | 4.00 |
| FBS-850-RND | 4.25 |
| FBS-900-RND | 4.50 |
| FBS-100-RND | 5.00 |
| FBS-400-SQR | 2.00 |
| FBS-500-SQR | 2.50 |
| FBS-600-SQR | 3.00 |
| FBS-700-SQR | 3.50 |
| FBS-800-SQR | 4.00 |

## Aluminum Collar

| Catalog No. | Pole Dia (in) |
|---|---|
| SAC-400-01-A | 4.00 |
| SAC-450-01-A | 4.50 |
| SAC-500-01-A | 5.00 |
| SAC-600-01-A | 6.00 |
| SAC-700-01-A | 7.00 |
| SAC-800-01-A | 8.00 |
| SAC-100-01-A | 10.00 |
| SAC-120-01-A | 12.00 |

***Insert appropriate size

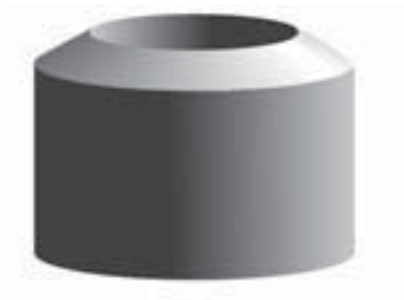

SAC-***-01-A

MAVERICK®
POLES AND STRUCTURE, LLC.

# Break-away Couplings

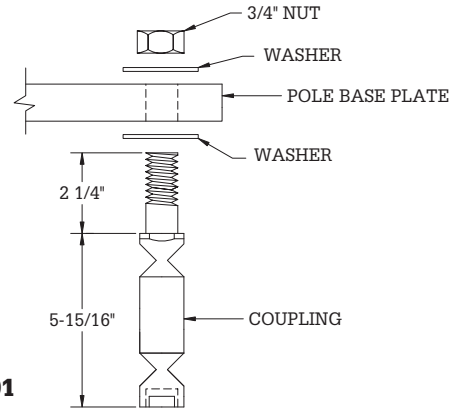


**BAW-075-01**

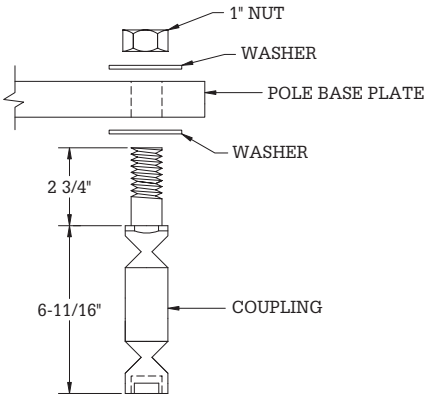


**BAW-100-01**

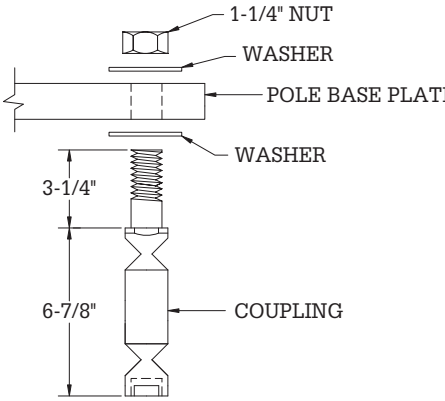


**BAW-125-01**

**Skirt**

**SKT-01**

**Notes:**

BAW couplings conform to AASHTO "Standard Specifications for Structural Supports for Highway Signs, Luminaires and Traffic Signals."

BAW couplings, nuts, bolts, washers and shims are galvanized in accordance with ASTM A153.

**Break-away Couplings**

| Catalog Number | Ten. Yield Strength (kips) | Ult. Shear Strength (kips) |
|---|---|---|
| BAW-075-01 | 25.5 | 2.0 |
| BAW-100-01 | 43.2 | 5.5 |
| BAW-125-01 | 43.2 | 5.5 |



MAVERICK® POLES AND STRUCTURE, LLC.

# Anchor Bolts

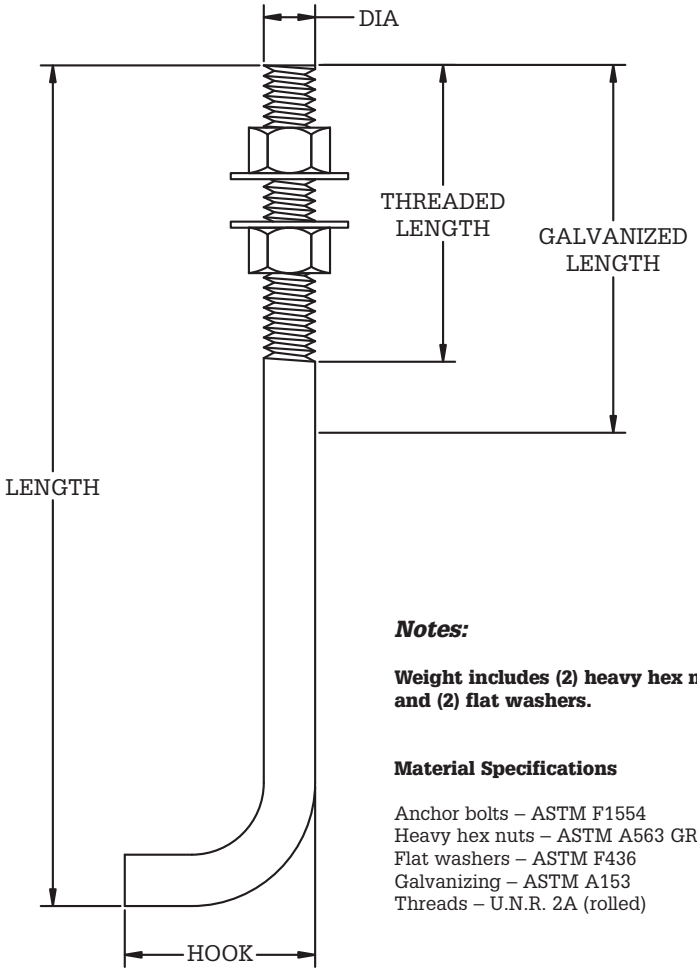


***Notes:***

**Weight includes (2) heavy hex nuts and (2) flat washers.**

**Material Specifications**

Anchor bolts – ASTM F1554
Heavy hex nuts – ASTM A563 GR. DH
Flat washers – ASTM F436
Galvanizing – ASTM A153
Threads – U.N.R. 2A (rolled)

## Standard Anchor Bolts

| Catalog Number | Bolt Diameter (in) | Bolt Length (in) | Hook Length (in) | Thread Length (in) | Galv Length (in) | Total Weight (lbs) |
|---|---|---|---|---|---|---|
| AB-075-20 | 3/4 | 17 | 3 | 5 | Full | 4.00 |
| AB-100-40 | 1 | 36 | 4 | 6 | Full | 8.53 |
| AB-125-48 | 1-1/4 | 42 | 6 | 8 | Full | 20.00 |

MAVERICK®
POLES AND STRUCTURE, LLC.

MAVERICK POLES AND STRUCTURE, LLC
FORT WORTH, TX
PHONE 817-441-9688
WWW.MAVERICKPOLES.COM